ENGINE ELECTRICAL

CONTENTS

CHARGING SYSTEM 2
GENERAL INFORMATION 2
SERVICE SPECIFICATIONS 3
SPECIAL TOOL 3
ON-VEHICLE SERVICE 4
Alternator Output Line Voltage Drop Test 4
Output Current Test 5
Regulated Voltage Test 7
Waveform Check Using An Analyzer 9
Alternator Relay Continuity Check 10
ALTERNATOR 11
STARTING SYSTEM 17
GENERAL INFORMATION 17
SERVICE SPECIFICATIONS 17
STARTER MOTOR 18
IGNITION SYSTEM 30
GENERAL INFORMATION 30
SERVICE SPECIFICATIONS 32
SPECIAL TOOL 32
ON-VEHICLE SERVICE 33
Ignition Coil (With Built-in Power Transistor) Check <GDI> 33
Ignition Coil (With Built-in Power Transistor) Check <MPI> 34
Resistive Cord Check <MPI> 34
Spark Plug Check <GDI> 34
Spark Plug Check and Cleaning <MPI> 35
Camshaft Position Sensor Check 35
Crank Angle Sensor Check 35
Detonation Sensor Check <4G9> 35
Waveform Check Using An Analyzer <MPI> 36
IGNITION COIL 40
CRANK ANGLE SENSOR 41
CAMSHAFT POSITION SENSOR 41
DETONATION SENSOR <4G9> 42

CHARGING SYSTEM

GENERAL INFORMATION

The charging system uses the alternator output to keep the battery charged at a constant level under various electrical loads.

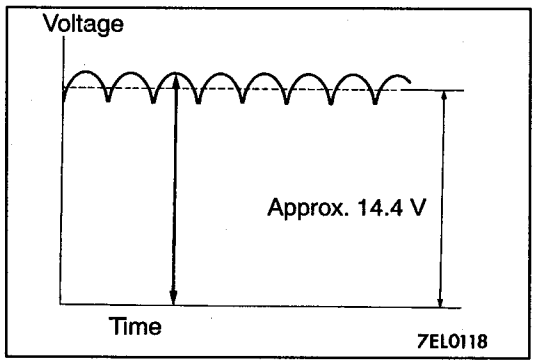

OPERATION

Rotation of the excited field coil generates AC voltage in the stator.
This alternating current is rectified through diodes to DC voltage having a waveform shown in the illustration at left. The average output voltage fluctuates slightly with the alternator load condition.

When the ignition switch is turned on, current flows in the field coil and initial excitation of the field coil occurs.
When the stator coil begins to generate power after the engine is started, the field coil is excited by the output current of the stator coil.
The alternator output voltage rises as the field current increases and it falls as the field current decreases. When the battery voltage (alternator S terminal voltage) reaches a regulated voltage of approx. 14.4 V, the field current is cut off. When the battery voltage drops below the regulated voltage, the voltage regulator regulates the output voltage to a constant level by controlling the field current.
In addition, when the field current is constant, the alternator output voltage rises as the engine speed increases.

SYSTEM DIAGRAM

<4G1>

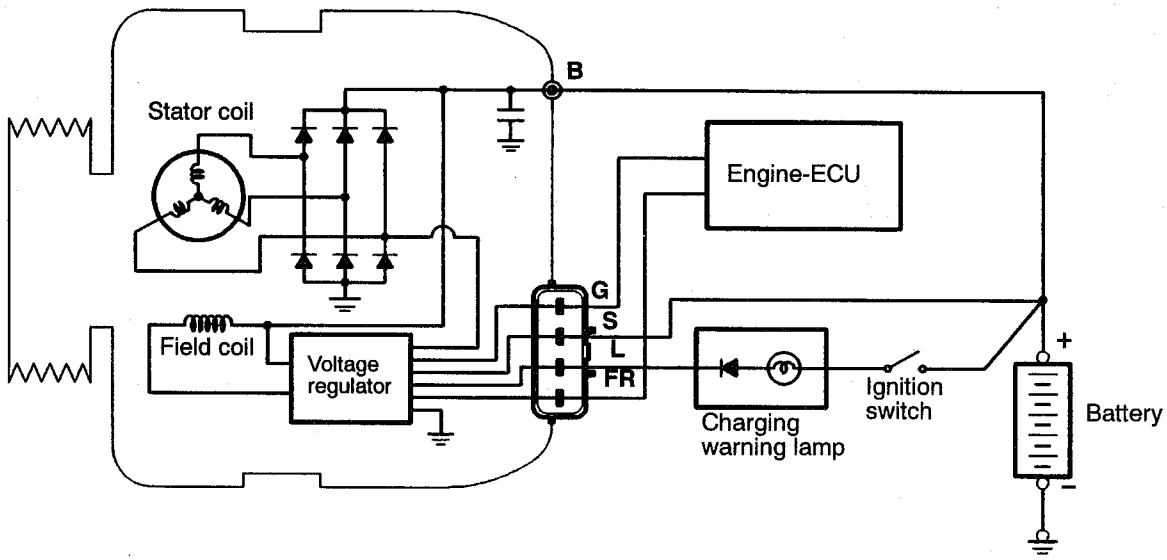

<4G9>

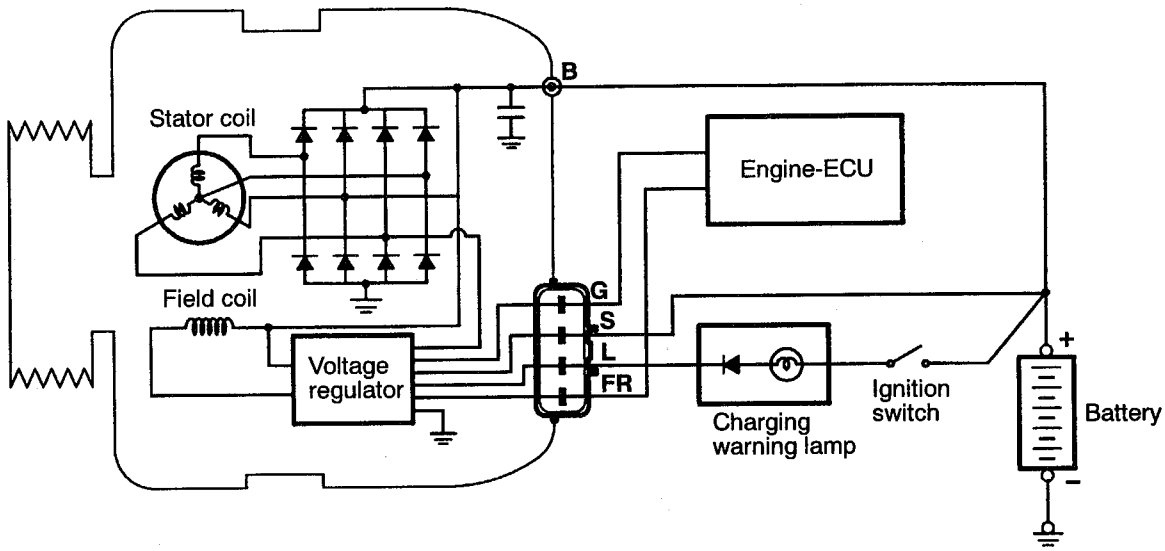

W6060AE

ALTERNATOR SPECIFICATIONS

Items	4G1	4G9-MPI	4G9-GDI
Type	Battery voltage sensing	Battery voltage sensing	Battery voltage sensing
Rated output V/A	12/80	12/85	12/100
Voltage regulator	Electronic built-in type	Electronic built-in type	Electronic built-in type

SERVICE SPECIFICATIONS

Items		Standard value	Limit
Alternator output line voltage drop (at 30 A) V		–	Max. 0.3
Regulated voltage ambient temp. at voltage regulator V	–20°C	14.2–15.4	–
	20°C	13.9–14.9	–
	60°C	13.4–14.6	–
	80°C	13.1–14.5	–
Output current		–	70% of normal output current

SPECIAL TOOL

Tool	Number	Name	Use
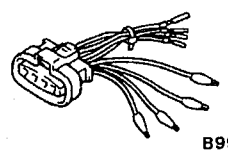 B991519	MB991519	Alternator test harness	Checking the alternator (S terminal voltage)

ON-VEHICLE SERVICE

ALTERNATOR OUTPUT LINE VOLTAGE DROP TEST

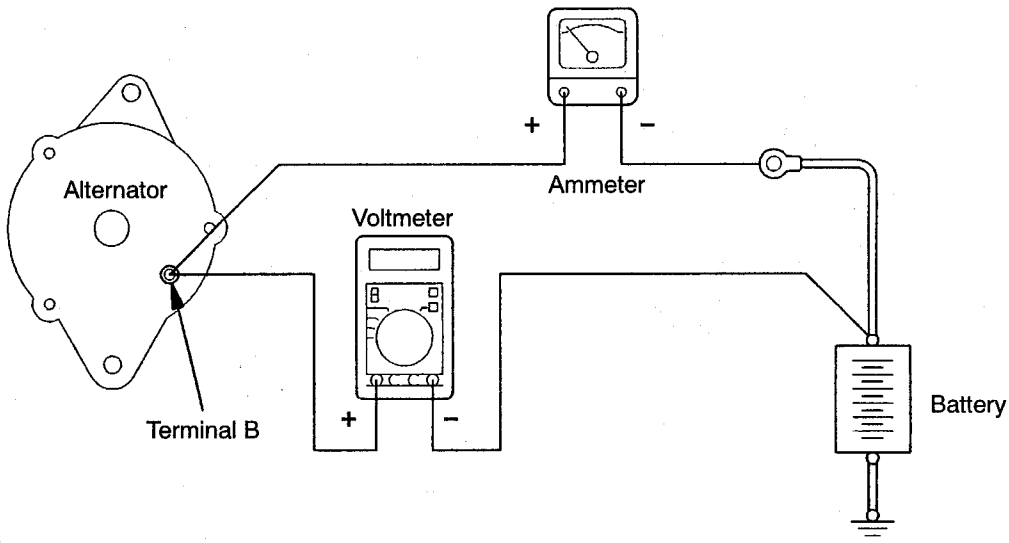

9EN0468

This test determines whether the wiring from the alternator "B" terminal to the battery (+) terminal (including the fusible line) is in a good condition or not.

(1) Always be sure to check the following before the test.
- Alternator installation
- Alternator drive belt tension
- Fusible link
- Abnormal noise from the alternator while the engine is running

(2) Turn the ignition switch to the LOCK (OFF) position.

(3) Disconnect the negative battery cable.

(4) Disconnect the alternator output wire from the alternator "B" terminal and connect a DC test ammeter with a range of 0–100 A in series between the "B" terminal and the disconnected output wire. (Connect the (+) lead of the ammeter to the "B" terminal, and then connect the (–) lead of the ammeter to the disconnected output wire.)

NOTE
An inductive-type ammeter which enables measurements to be taken without disconnecting the alternator output wire should be recommended. Using this equipment will lessen the possibility of a voltage drop caused by a loose "B" terminal connection.

(5) Connect a digital-type voltmeter between the alternator "B" terminal and the battery (+) terminal. (Connect the (+) lead of the voltmeter to the "B" terminal and the connect the (–) lead of the voltmeter to the battery (+) cable.)

(6) Reconnect the negative battery cable.
(7) Connect a tachometer or the MUT-II.
(8) Leave the hood open.
(9) Start the engine.
(10) With the engine running at 2,500 r/min, turn the headlamps and other lamps on and off to adjust the alternator load so that the value displayed on the ammeter is slightly above 30 A.
Adjust the engine speed by gradually decreasing it until the value displayed on the ammeter is 30 A. Take a reading of the value displayed on the voltmeter at this time.

Limit: max. 0.3 V

NOTE
When the alternator output is high and the value displayed on the ammeter does not decrease until 30 A, set the value to 40 A. Read the value displayed on the voltmeter at this time. When the value range is 40 A, the limit is max. 0.4 V.

(11) If the value displayed on the voltmeter is above the limit value, there is probably a malfunction in the alternator output wire, so check the wiring between the alternator "B" terminal and the battery (+) terminal (including fusible link).
If a terminal is not sufficiently tight or if the harness has become discolored due to overheating, repair and then test again.
(12) After the test, run the engine at idle.
(13) Turn off all lamps and the ignition switch.
(14) Remove the tachometer or the MUT-II.
(15) Disconnect the negative battery cable.
(16) Disconnect the ammeter and voltmeter.
(17) Connect the alternator output wire to the alternator "B" terminal.
(18) Connect the negative battery cable.

OUTPUT CURRENT TEST

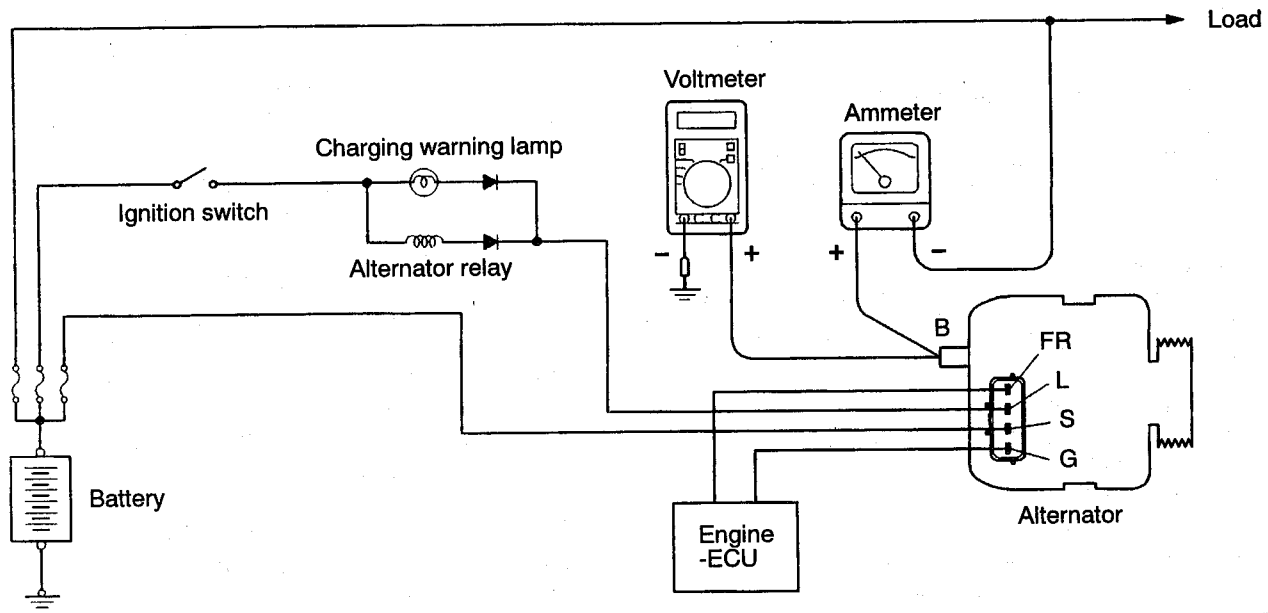

This test determines whether the alternator output current is normal.

(1) Before the test, always be sure to check the following.
- Alternator installation
- Battery

NOTE
The battery should be slightly discharged. The load needed by a fully-charged battery is insufficient for an accurate test.

- Alternator drive belt tension
- Fusible link
- Abnormal noise from the alternator while the engine is running.

(2) Turn the ignition switch to the LOCK (OFF) position.
(3) Disconnect the negative battery cable.
(4) Disconnect the alternator output wire from the alternator "B" terminal. Connect a DC test ammeter with a range of 0–100 A in series between the "B" terminal and the disconnected output wire. (Connect the (+) lead of the ammeter to the "B" terminal. Connect the (–) lead of the ammeter to the disconnected output wire.)

Caution
Never use clips but tighten bolts and nuts to connect the line. Otherwise loose connections (e.g. using clips) will lead to a serious accident because of high current.

NOTE
An inductive-type ammeter which enables measurements to be taken without disconnecting the alternator output wire should be recommended.

(5) Connect a voltmeter with a range of 0–20 V between the alternator "B" terminal and the earth. (Connect the (+) lead of the voltmeter to the "B" terminal, and then connect the (–) lead of the voltmeter to the earth.)
(6) Connect the negative battery cable.
(7) Connect a tachometer or the MUT-II.
(8) Leave the hood open.
(9) Check that the reading on the voltmeter is equal to the battery voltage.

NOTE
If the voltage is 0 V, the cause is probably an open circuit in the wire or fusible link between the alternator "B" terminal and the battery (+) terminal.

(10) Turn the light switch on to turn on headlamps and then start the engine.
(11) Immediately after setting the headlamps to high beam and turning the heater blower switch to the high revolution position, increase the engine speed to 2,500 r/min and read the maximum current output value displayed on the ammeter.

Limit: 70% of normal current output

NOTE
- For the nominal current output, refer to the Alternator Specifications.
- Because the current from the battery will soon drop after the engine is started, the above step should be carried out as quickly as possible in order to obtain the maximum current output value.
- The current output value will depend on the electrical load and the temperature of the alternator body.
- If the electrical load is small while testing, the specified level of current may not be output even though the alternator is normal. In such cases, increase the electrical load by leaving the headlamps turned on for some time to discharge the battery or by using the lighting system in another vehicle, and then test again.
- The specified level of current also may not be output if the temperature of the alternator body or the ambient temperature is too high. In such cases, cool the alternator and then test again.

(12) The reading on the ammeter should be above the limit value. If the reading is below the limit value and the alternator output wire is normal, remove the alternator from the engine and check the alternator.
(13) Run the engine at idle after the test.
(14) Turn the ignition switch to the LOCK (OFF) position.
(15) Remove the tachometer or the MUT-II.
(16) Disconnect the negative battery cable.
(17) Disconnect the ammeter and voltmeter.
(18) Connect the alternator output wire to the alternator "B" terminal.
(19) Connect the negative battery cable.

REGULATED VOLTAGE TEST

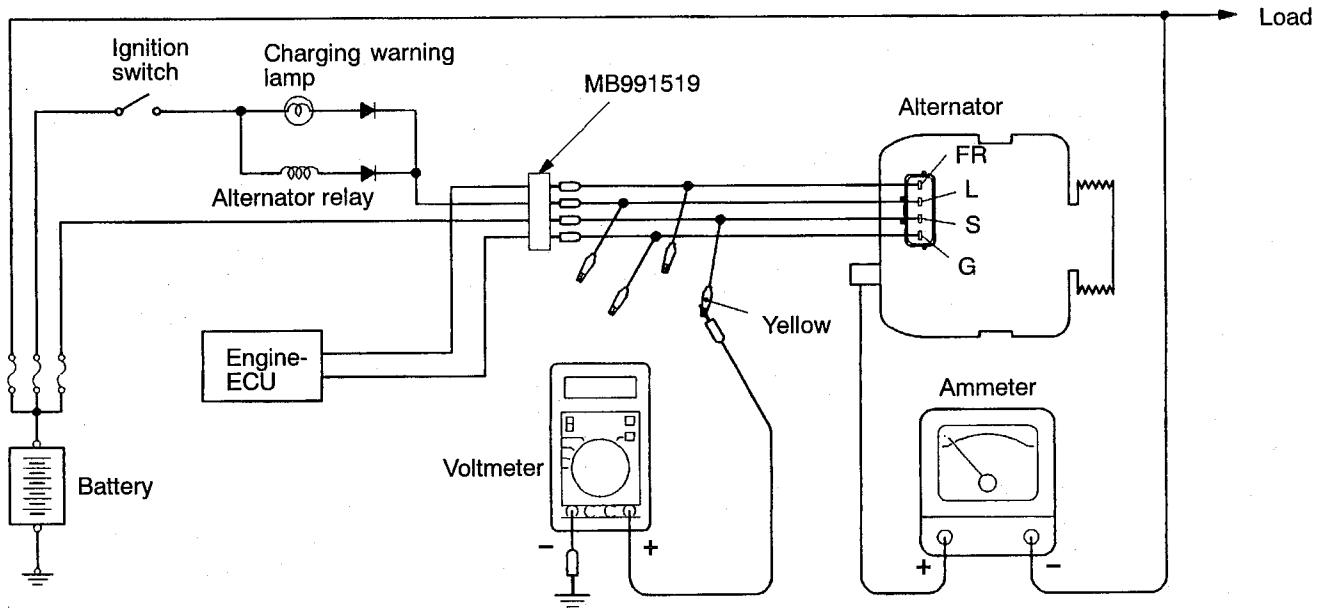

6EN1163

This test determines whether the voltage regulator is correctly controlling the alternator output voltage.

(1) Always be sure to check the following before the test.
- Alternator installation
- Check that the battery installed in the vehicle is fully charged.
- Alternator drive belt tension
- Fusible link
- Abnormal noise from the alternator while the engine is running

(2) Turn the ignition switch to the LOCK (OFF) position.
(3) Disconnect the negative battery cable.
(4) Use the special tool (Alternator test harness: MB991519) to connect a digital voltmeter between the alternator S terminal and earth. (Connect the (+) lead of the voltmeter to the "S" terminal, and then connect the (–) lead of the voltmeter to a secure earth or to the battery (–) terminal.)
(5) Disconnect the alternator output wire from the alternator "B" terminal.
(6) Connect a DC test ammeter with a range of 0–100 A in series between the "B" terminal and the disconnected output wire. (Connect the (+) lead of the ammeter to the "B" terminal. Connect the (–) lead of the ammeter to the disconnected output wire.)
(7) Reconnect the negative battery cable.
(8) Connect a tachometer or the MUT-II.
(9) Turn the ignition switch to the ON position and check that the reading on the voltmeter is equal to the battery voltage.

NOTE
If the voltage is 0 V, the cause is probably an open circuit in the wire or fusible link between the alternator "S" terminal and the battery (+) terminal.

(10) Turn all lamps and accessories off.
(11) Start the engine.
(12) Increase the engine speed to 2,500 r/min.
(13) Read the value displayed on the voltmeter when the alternator output current alternator becomes 10 A or less.
(14) If the voltage reading conforms to the value in the voltage regulation, then the voltage regulator is operating normally.
If the voltage is not within the standard value, there is a malfunction of the voltage regulator or of the alternator.
(15) After the test, lower the engine speed to the idle speed.
(16) Turn the ignition switch to the LOCK (OFF) position.
(17) Remove the tachometer or the MUT-II.
(18) Disconnect the negative battery cable.
(19) Disconnect the ammeter and voltmeter.
(20) Connect the alternator output wire to the alternator "B" terminal.
(21) Remove the special tool, and return the connector to the original condition.
(22) Connect the negative battery cable.

Voltage Regulation Table

Standard value:

Inspection terminal	Voltage regulator ambient temperature °C	Voltage V
Terminal "S"	–20	14.2–15.4
	20	13.9–14.9
	60	13.4–14.6
	80	13.1–14.5

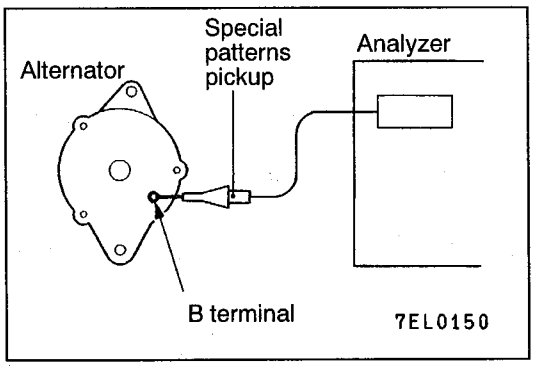

WAVEFORM CHECK USING AN ANALYZER

MEASUREMENT METHOD

Connect the analyzer special patterns pick-up to the alternator B terminal.

STANDARD WAVEFORM

Observation Conditions

FUNCTION	SPECIAL PATTERNS
PATTERN HEIGHT	VARIABLE
VARIABLE knob	Adjust while viewing the waveform.
PATTERN SELECTOR	RASTER
Engine speed	Curb idle speed

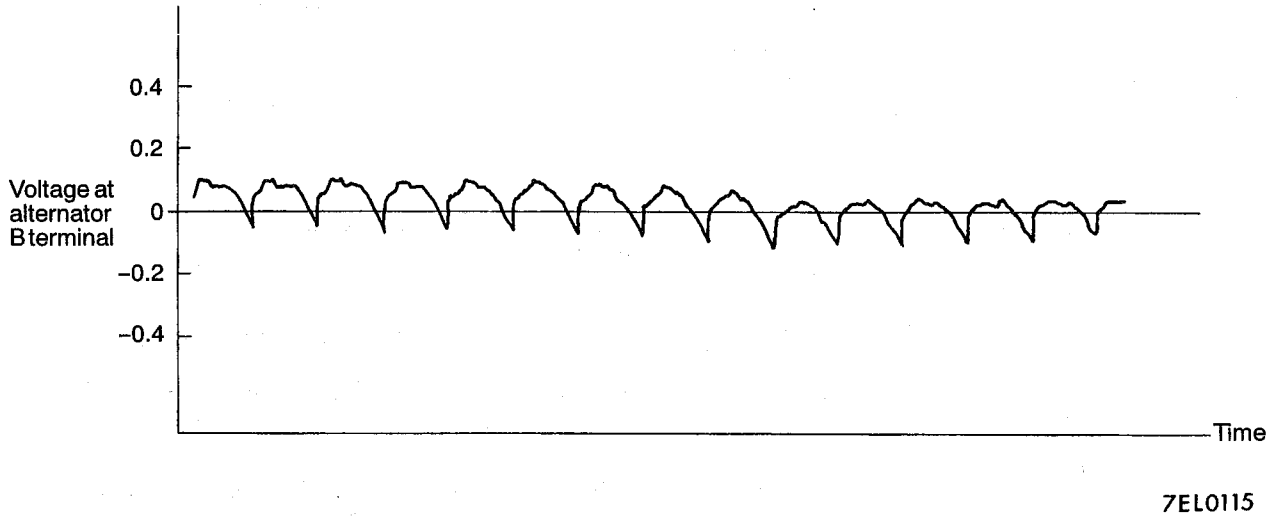

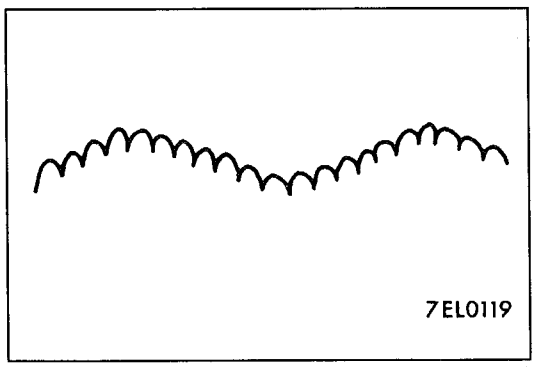

NOTE

The voltage waveform of the alternator "B" terminal can undulate as shown at left. This waveform is produced when the regulator operates according to fluctuations in the alternator load (current), and is normal for the alternator. In addition, when the voltage waveform reaches an excessively high value (approx. 2 V or higher at idle), it often indicates an open circuit due to a brown fuse between alternator "B" terminal and battery, but not a defective alternator.

EXAMPLES OF ABNORMAL WAVEFORMS

NOTE
1. The size of the waveform patterns differs largely, depending on the adjustment of the variable knob on the analyzer.
2. Identification of abnormal waveforms is easier when there is a large output current (regulator is not operating). (Waveforms can be observed when the headlamps are illuminated.)
3. Check the conditions of the charging warning lamp (illuminated/not illuminated). Also, check the charging system totally.

Abnormal waveforms	Problem cause	Abnormal waveforms	Problem cause
Example 1  A7EL0120	Open diode	Example 4  A7EL0123	Short in stator coil
Example 2 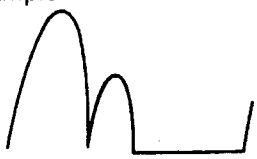 A7EL0121	Short in diode	Example 5  A7EL0124 At this time, the charging warning lamp is illuminated.	Open supplementary diode
Example 3  A7EL0122	Broken wire in stator coil		

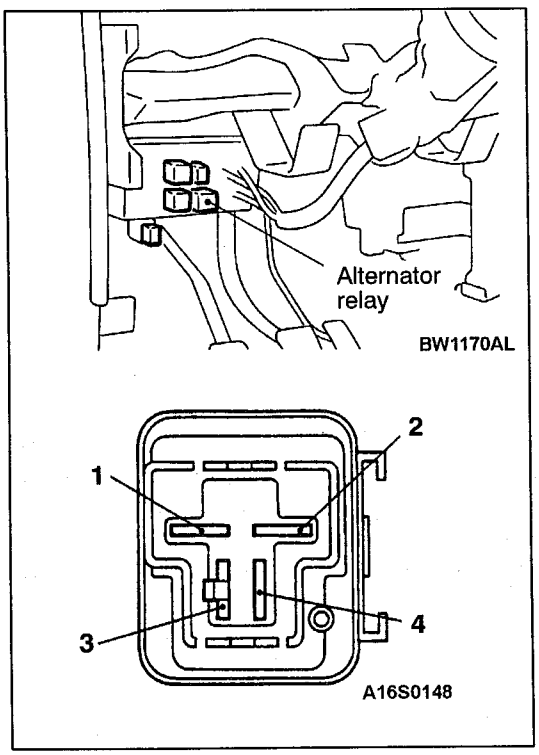

ALTERNATOR RELAY CONTINUITY CHECK

1. Remove the alternator relay from the relay box inside the instrument panel.
2. Set the analogue-type circuit tester to the Ω range and check that there is continuity when the (+) terminal of the tester is connected to terminal 2 of the alternator relay and the (–) terminal is connected to terminal 4.
3. Next, check that there is no continuity when the (+) terminal is connected to terminal 4 and the (–) terminal is connected to terminal 2.
4. If the continuity checks in steps 2 and 3 show a defect, replace the alternator relay.

ALTERNATOR

REMOVAL AND INSTALLATION

Pre-removal Operation
Under Cover Removal

Post-installation Operation
- Drive Belt Tension Adjustment
- Under Cover Installation

<4G9>

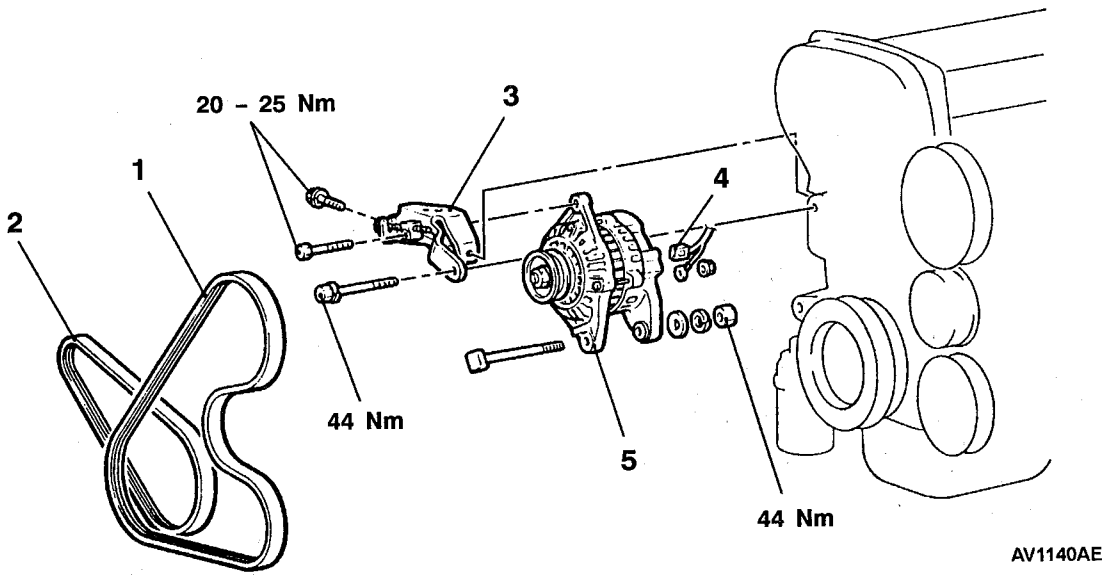

AV1140AE

<4G1>

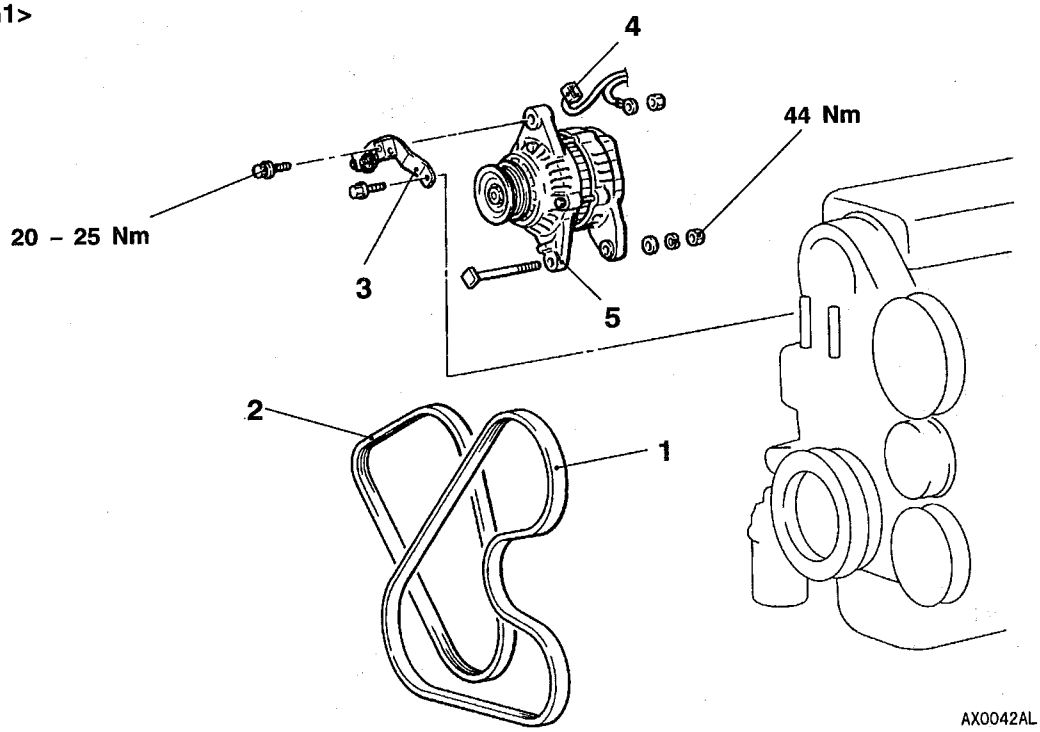

AX0042AL

Disassembly steps

1. Drive belt (Power steering, A/C)
2. Drive belt (Alternator)
3. Alternator brace
4. Alternator connector
5. Alternator

DISASSEMBLY AND REASSEMBLY

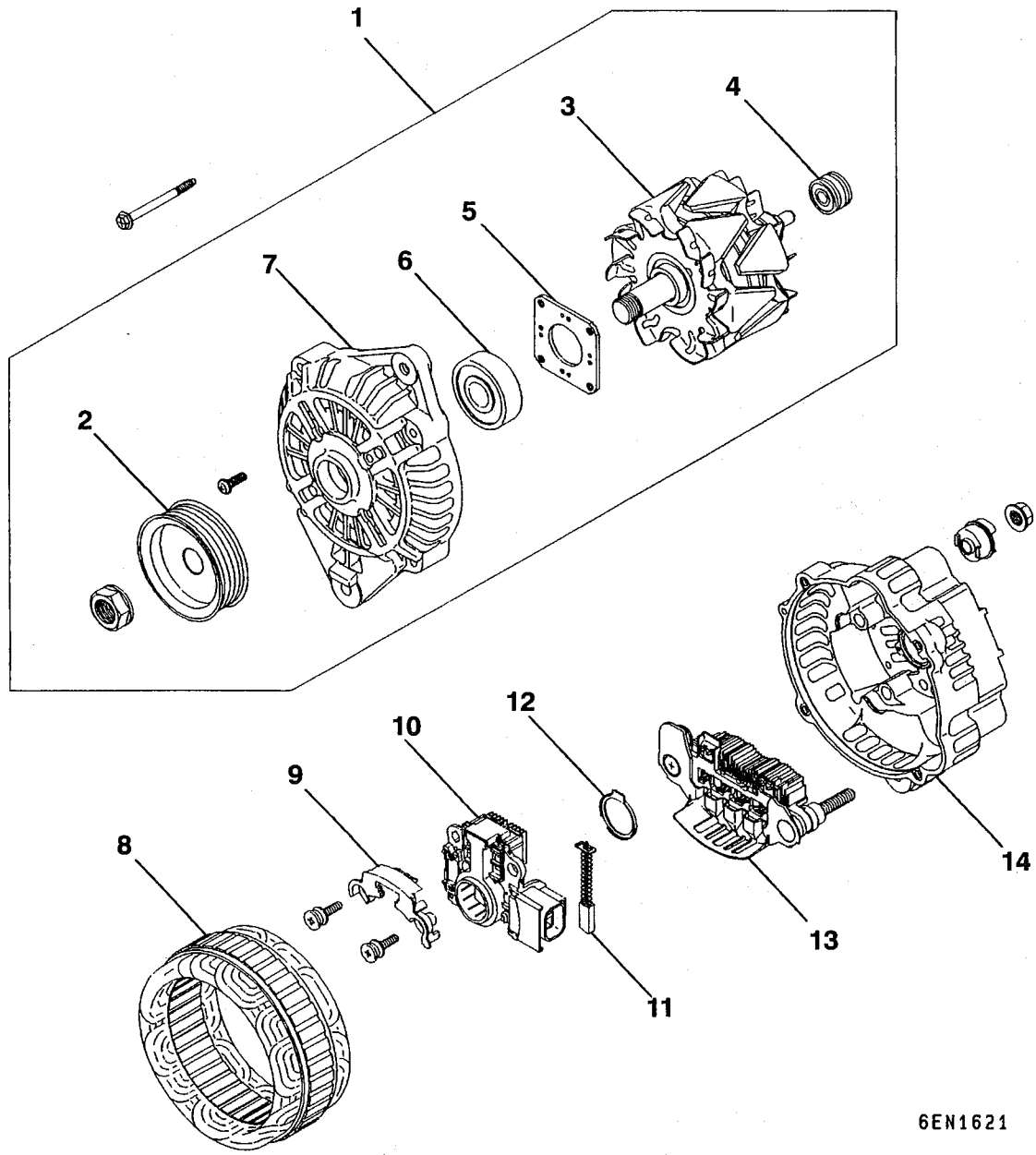

Disassembly steps

◀A▶ 1. Front bracket assembly
◀B▶ 2. Alternator pulley
▶B◀ 3. Rotor
4. Rear bearing
5. Bearing retainer
6. Front bearing
7. Front bracket
◀C▶ 8. Stator
9. Plate
◀C▶ ▶A◀ 10. Regulator assembly
11. Brush
12. Slinger
13. Rectifier
14. Rear bracket

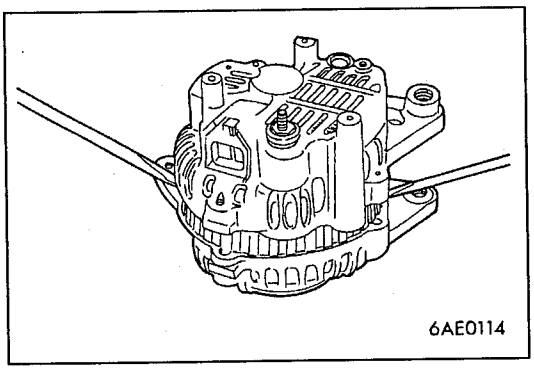

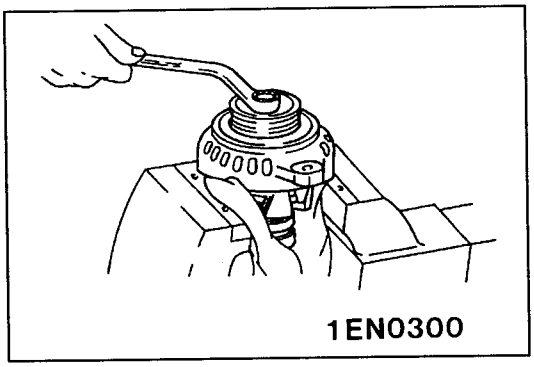

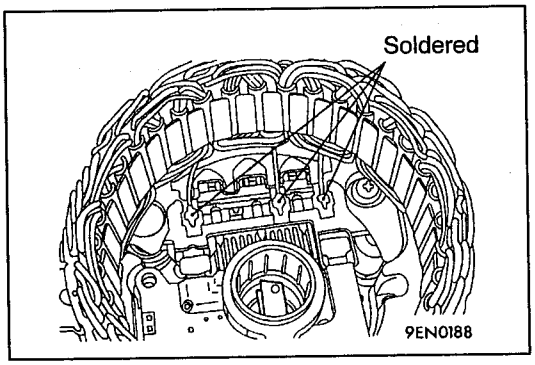

DISASSEMBLY SERVICE POINTS

◀A▶ FRONT BRACKET ASSEMBLY REMOVAL

Insert a flat tip screwdriver, etc., in the clearance between the front bracket assembly and stator core, to pry open and separate the stator and front bracket.

Caution
The stator coil could be damaged so do not insert the screwdriver too far.

◀B▶ ALTERNATOR PULLEY REMOVAL

Face the pulley side upward, fix the rotor with a work bench and remove the pulley.

Caution
Use care so that the rotor is not damaged.

◀C▶ STATOR/REGULATOR ASSEMBLY REMOVAL

1. Use a soldering iron (180 to 250 W) to unsolder the stator. This work should complete within approximately four seconds to prevent heat from transferring to the diode.
2. When removing the rectifier from the regulator assembly, remove the soldered sections of the rectifier.

Caution
(1) Use care to make sure that the heat of the soldering iron is not transmitted to the diodes for a long period.
(2) Use care that no undue force is exerted to the lead wires of the diodes.

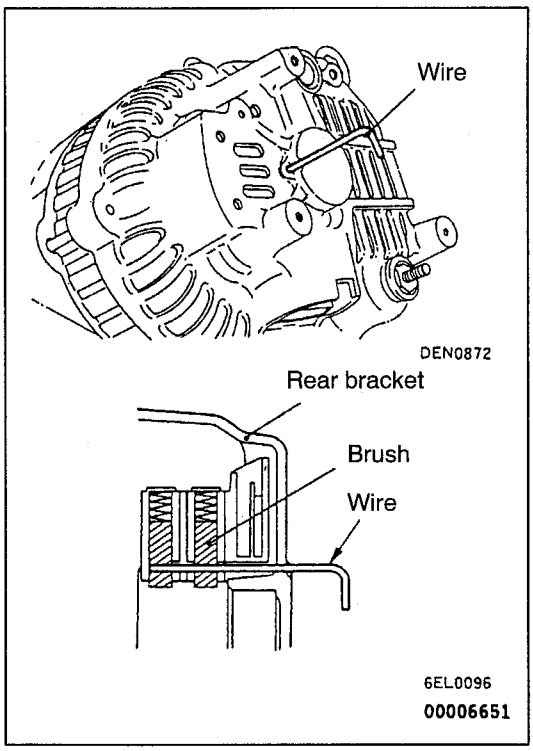

REASSEMBLY SERVICE POINTS

▶A◀ REGULATOR ASSEMBLY INSTALLATION

After installing the regulator assembly, insert a wire into the hole provided on the rear bracket while pressing in the brush to fix the brush.

NOTE
The brush is fixed when a wire is inserted, making rotor installation easier.

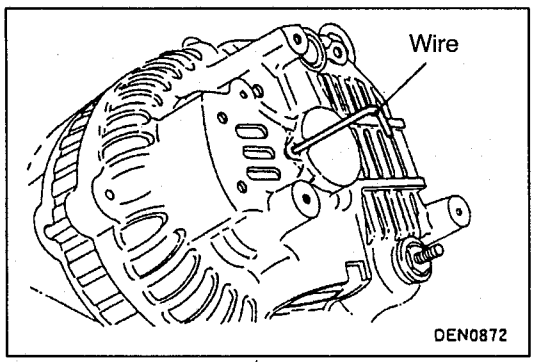

▶B◀ ROTOR INSTALLATION

After installing the rotor, remove the wire used to fix the brush.

INSPECTION

ROTOR CHECK

1. Check the continuity between the rotor coil slip rings, and replace the rotor if the resistance value is not at the standard value.

   Standard value: 3 – 5 Ω

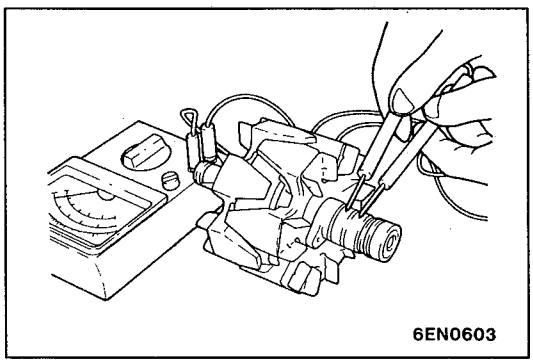

2. Check the continuity between the slip ring and core, and if there is continuity, replace the rotor.

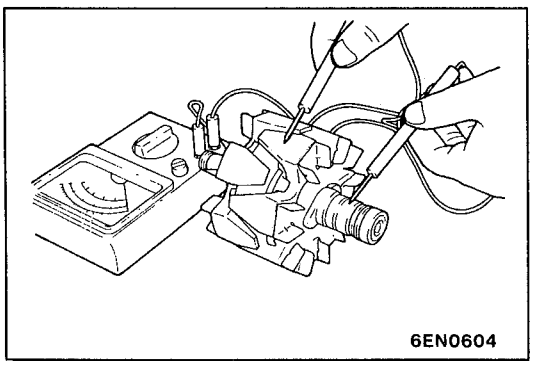

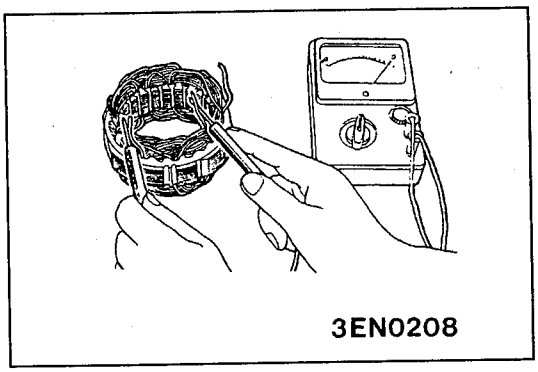
3EN0208

STATOR CHECK

1. Check the continuity between the coil leads, and if there is continuity, replace the stator.

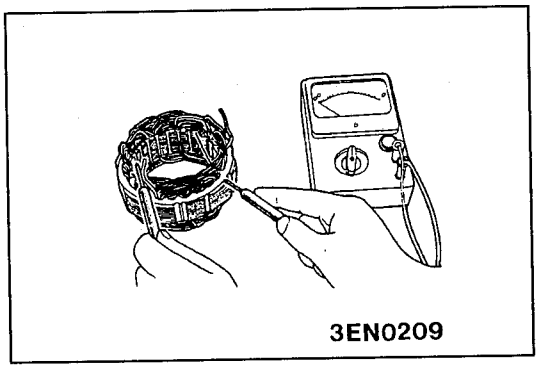
3EN0209

2. Check the continuity between the coil and core, and if there is continuity, replace the stator.

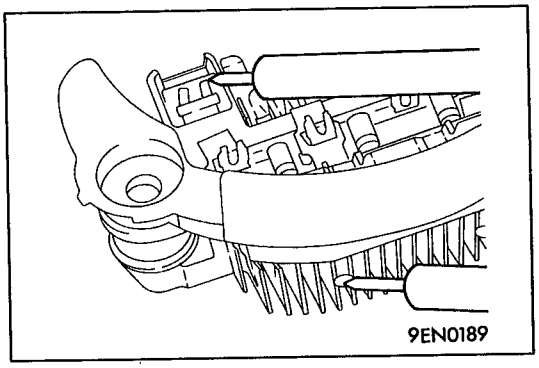
9EN0189

RECTIFIER CHECK

1. Inspect the (+) heat sink by checking the continuity between the (+) heat sink and stator coil lead wire connection terminal using a tester probe.
   If there is a continuity at both, the diode is short circuited, so replace the rectifier.

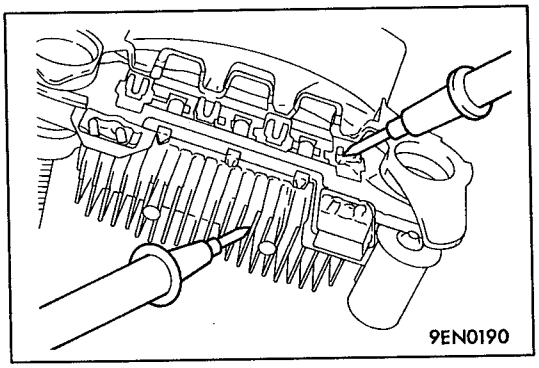
9EN0190

2. Inspect the (–) heat sink by checking the continuity between the (–) heat sink and stator coil lead wire connection terminal using a tester probe.
   If there is a continuity at both, the diode is short circuited, so replace the rectifier.

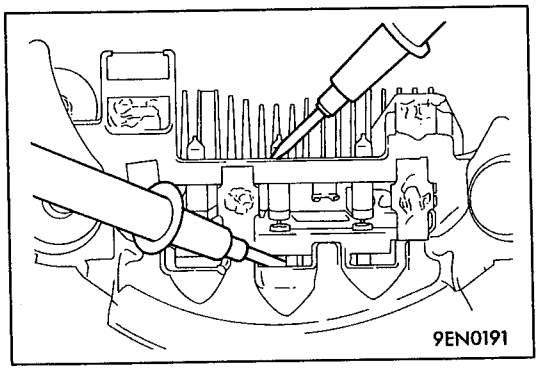
9EN0191

3. Check the diode trio by connecting an ohmmeter to both ends of each diode and check the continuity of the three diodes.
   If there is a continuity at both ends, or if there is no continuity, the diode is damaged so replace the rectifier.

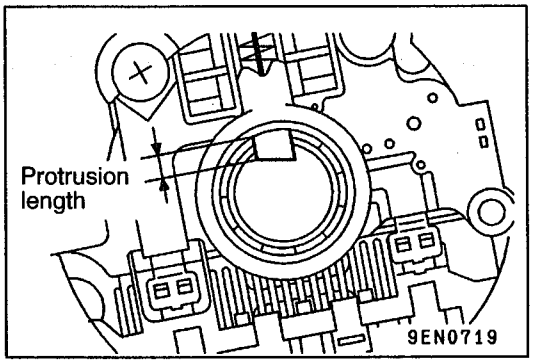

BRUSH CHECK

1. Measure the length of the brush protrusion shown in the illustration, and replace the brush if the measured value is below the limit value.

   Limit: 2 mm or less

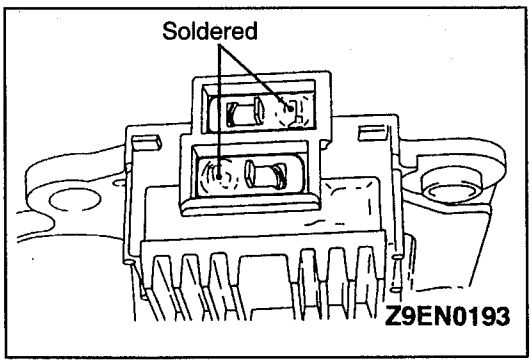

2. The brush can be removed if the solder of the brush lead wire is removed.
3. When installing a new brush, insert the brush into the holder as shown in the illustration, and then solder the lead wires.

STARTING SYSTEM

GENERAL INFORMATION

If the ignition switch is turned to the "START" position, current flows in the pull-in and holding coils provided inside magnetic switch, attracting the plunger. When the plunger is attracted, the lever connected to the plunger is actuated to engage the starter clutch.
On the other hand, attracting the plunger will turn on the magnetic switch, allowing the B-terminal and M-terminal to conduct. Thus, current flows to engage the starter motor.
When the ignition switch is returned to the "ON" position after starting the engine, the starter clutch is disengaged from the ring gear.
An overrunning clutch is provided between the pinion and the armature shaft, to prevent damage to the starter.

SYSTEM DIAGRAM

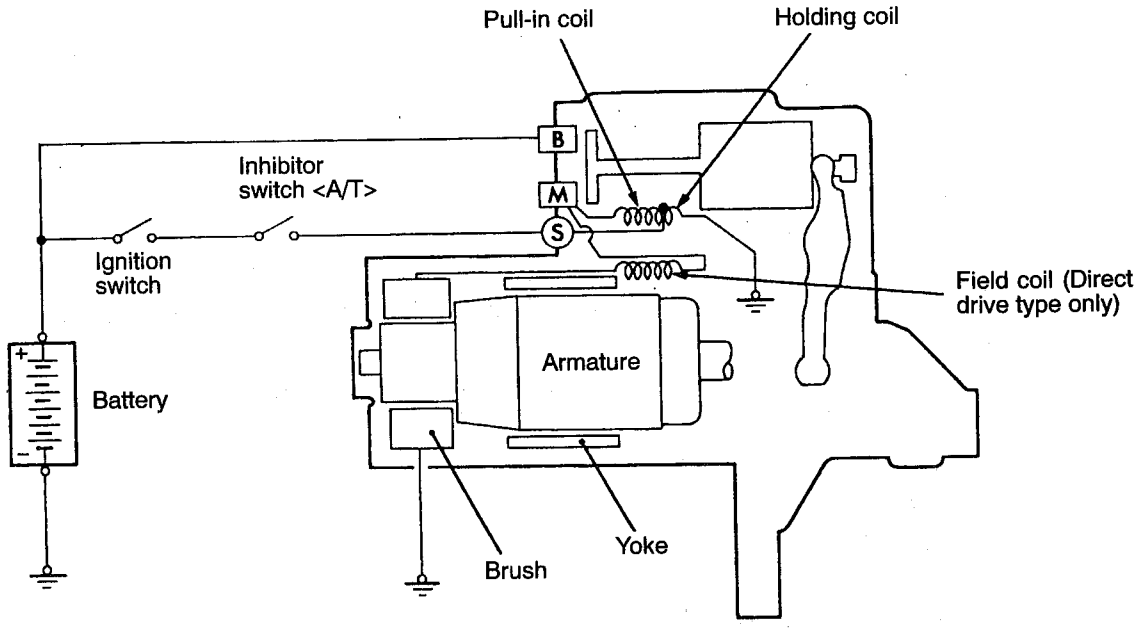

9EN0288

STARTER MOTOR SPECIFICATIONS

Items	4G1	4G9
Type	Direct drive	Reduction drive with planetary gear
Rated output kW/V	0.9/12	1.2/12
No. of pinion teeth	8	8

SERVICE SPECIFICATIONS

Items	Standard value	Limit
Pinion gap mm	0.5–2.0	–
Commutator outer diameter mm	29.4	28.8
Commutator runout mm	–	0.05
Commutator undercut mm	0.5	0.2

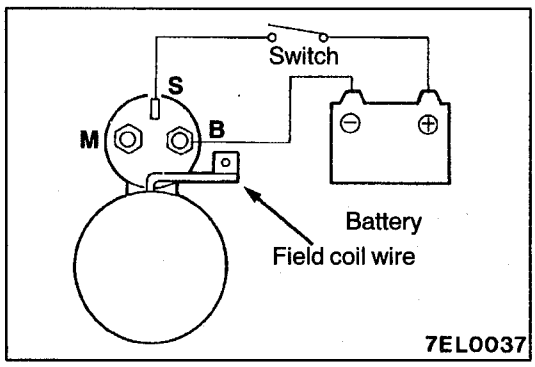

STARTER MOTOR

INSPECTION

PINION GAP ADJUSTMENT

1. Disconnect field coil wire from M-terminal of magnetic switch.
2. Connect a 12-volt battery between S-terminal and M-terminal.
3. Set switch to "ON", and pinion will move out.

Caution
This test must be performed quickly (in less than 10 seconds) to prevent coil from burning.

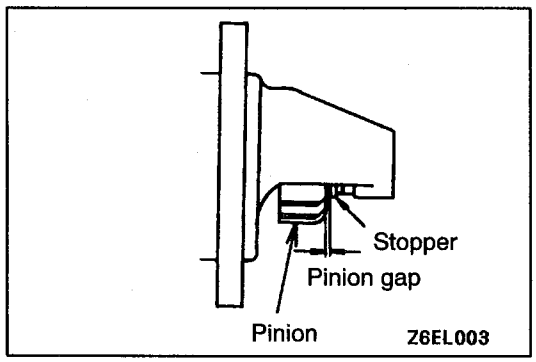

4. Check pinion to stopper clearance (pinion gap) with a thickness gauge.

Standard value: 0.5 – 2.0 mm

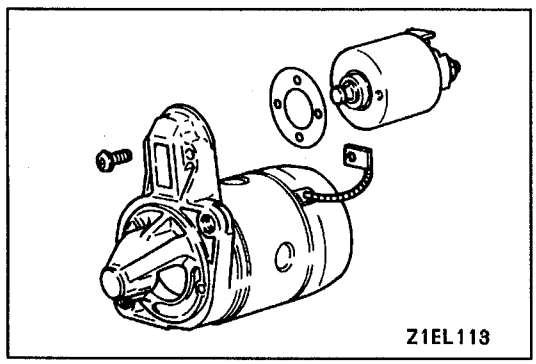

5. If pinion gap is out of specification, adjust by adding or removing gaskets between magnetic switch and front bracket.

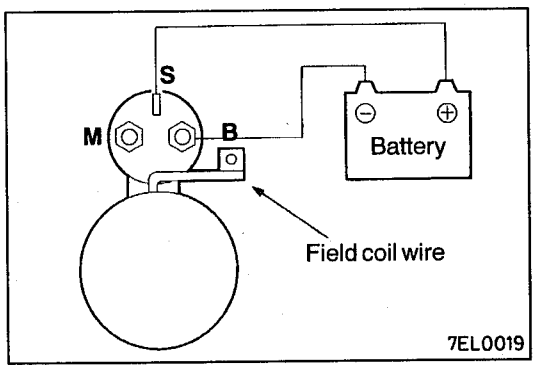

MAGNETIC SWITCH PULL-IN TEST

1. Disconnect field coil wire from M-terminal of magnetic switch.
2. Connect a 12-volt battery between S-terminal and M-terminal.

   Caution
   This test must be performed quickly (in less than 10 seconds) to prevent coil from burning.
3. If pinion moves out, then pull-in coil is good. If it doesn't, replace magnetic switch.

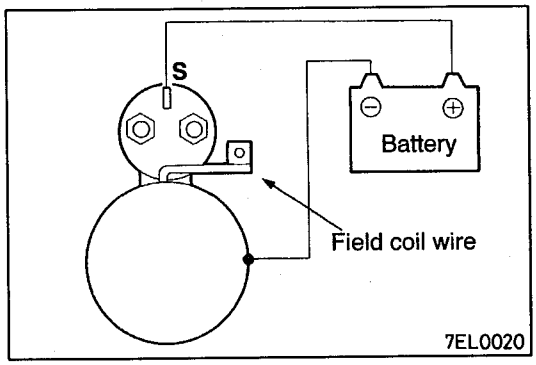

MAGNETIC SWITCH HOLD-IN TEST

1. Disconnect field coil wire from M-terminal of magnetic switch.
2. Connect a 12-volt battery between S-terminal and body.

   Caution
   This test must be performed quickly (in less than 10 seconds) to prevent coil from burning.
3. Manually pull out the pinion as far as the pinion stopper position.
4. If pinion remains out, everything is in order. If pinion moves in, hold-in circuit is open. Replace magnetic switch.

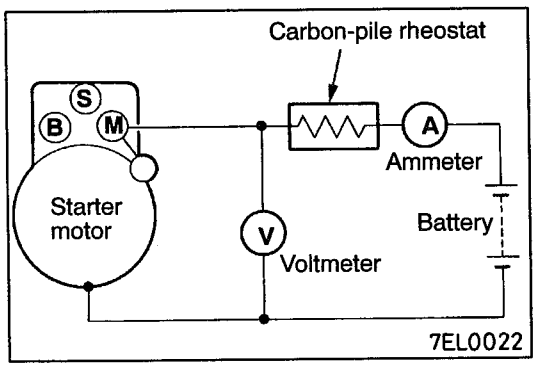

FREE RUNNING TEST

1. Place starter motor in a vise equipped with soft jaws and connect a fully-charged 12-volt battery to starter motor as follows:
2. Connect a test ammeter (100-ampere scale) and carbon pile rheostat in series with battery positive post and starter motor terminal.
3. Connect a voltmeter (15-volt scale) across starter motor.
4. Rotate carbon pile to full-resistance position.
5. Connect battery cable from battery negative post to starter motor body.
6. Adjust the rheostat until the battery voltage shown by the voltmeter is 11-volt.
7. Confirm that the maximum amperage is within the specifications and that the starter motor turns smoothly and freely.

   Current:
   max. 60 A (Direct drive type)
   max. 90 A (Reduction drive type)

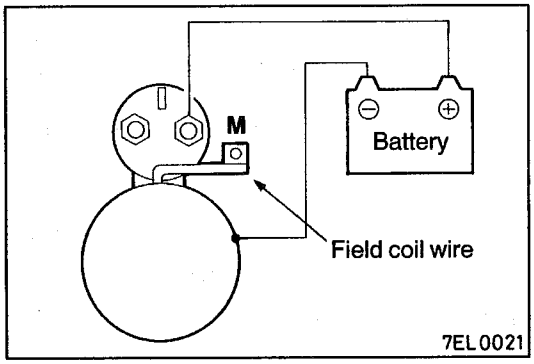

MAGNETIC SWITCH RETURN TEST

1. Disconnect field coil wire from M-terminal of magnetic switch.
2. Connect a 12-volt battery between M-terminal and body.

   Caution
   This test must be performed quickly (in less than 10 seconds) to prevent coil from burning.

3. Pull pinion out and release. If pinion quickly returns to its original position, everything is in order. If it doesn't, replace magnetic switch.

   Caution
   Be careful not to get your fingers caught when pulling out the pinion.

REMOVAL AND INSTALLATION

<GDI>

Pre-removal and Post-installation Operation
- Engine Cover and Under Cover Removal and Installation
- Front Propeller Shaft Removal and Installation (Refer to GROUP 25.)

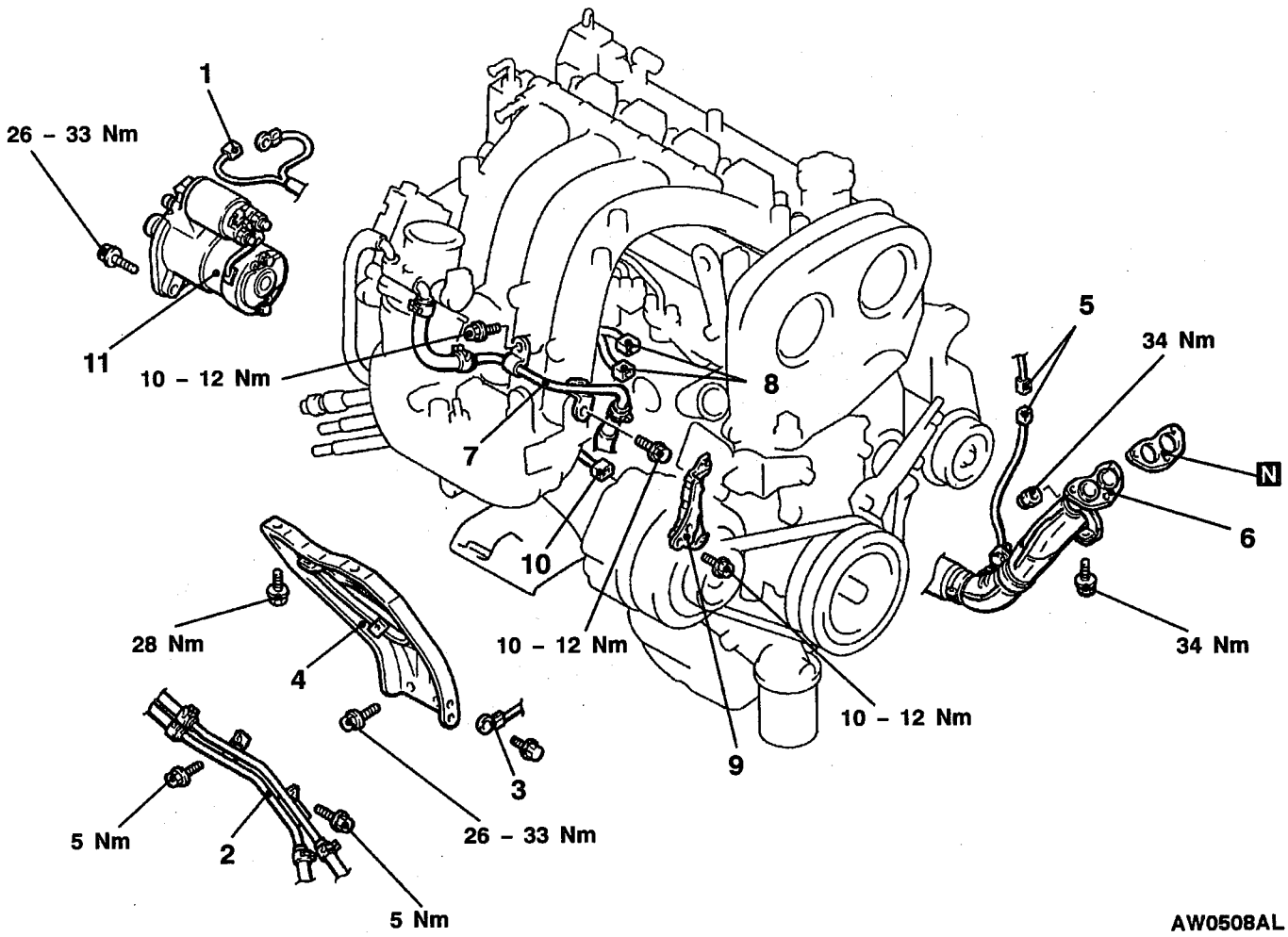

Disassembly steps

1. Starter harness connection
2. A/T oil pipe clamp
3. Earth cable connection
4. Intake manifold stay
5. Oxygen sensor connector connection
6. Front exhaust pipe connection
◀A▶ ▶A◀ • Transmission mount crossmember
7. Water pipe clamp
8. Injector harness connector connection
9. Harness connector bracket
10. Detonation sensor connector connection
◀B▶ 11. Starter motor assembly

<MPI>

Pre-removal and Post-installation Operation
- Battery Removal and Installation
- Under Cover Removal and Installation
- Front Propeller Shaft Removal and Installation (Refer to GROUP 25.)

<4G1>

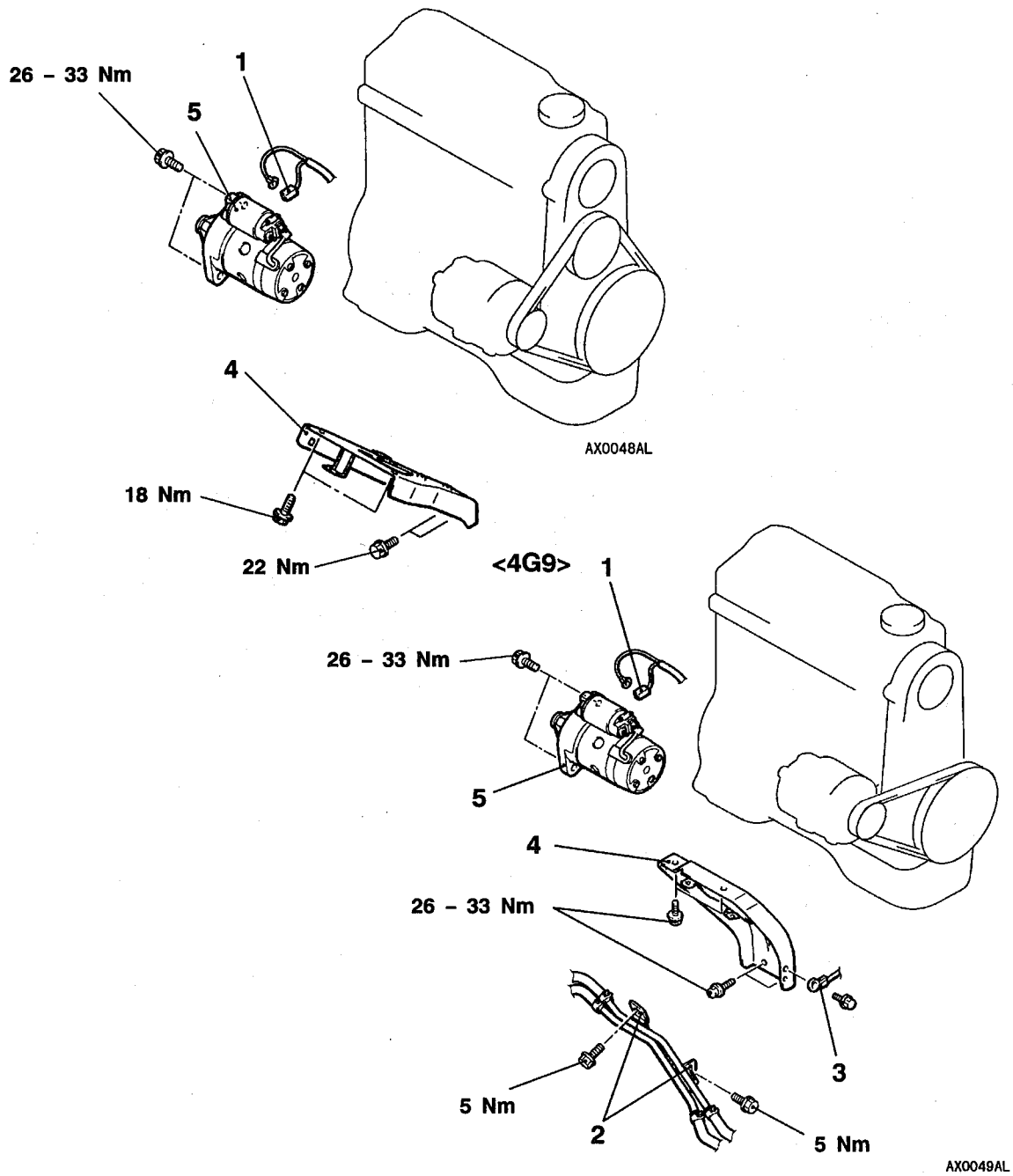

Disassembly steps

1. Starter harness connection
2. A/T oil pipe clamp <A/T>
3. Earth cable connection
4. Intake manifold stay
   - Oxygen sensor connector
   - Front exhaust pipe connection (Refer to GROUP 15.)

◀A▶ ▶A◀
- Transmission mount crossmember
- Detonation sensor connector <4G9>

5. Starter motor assembly

REMOVAL SERVICE POINTS

◀A▶ TRANSMISSION MOUNT CROSSMEMBER REMOVAL

1. Remove the transmission mount crossmember. (Refer to GROUP 32.)
2. Lower the jack holding the engine and transmission assembly to create clearance enough to remove the starter motor installation bolts.

◀B▶ STARTER MOTOR ASSEMBLY REMOVAL

Pull the starter motor assembly out of space between the intake manifold and cylinder block.

INSTALLATION SERVICE POINT

▶A◀ TRANSMISSION MOUNT CROSSMEMBER INSTALLATION

Refer to GROUP 32.

DISASSEMBLY AND REASSEMBLY <DIRECT DRIVE TYPE>

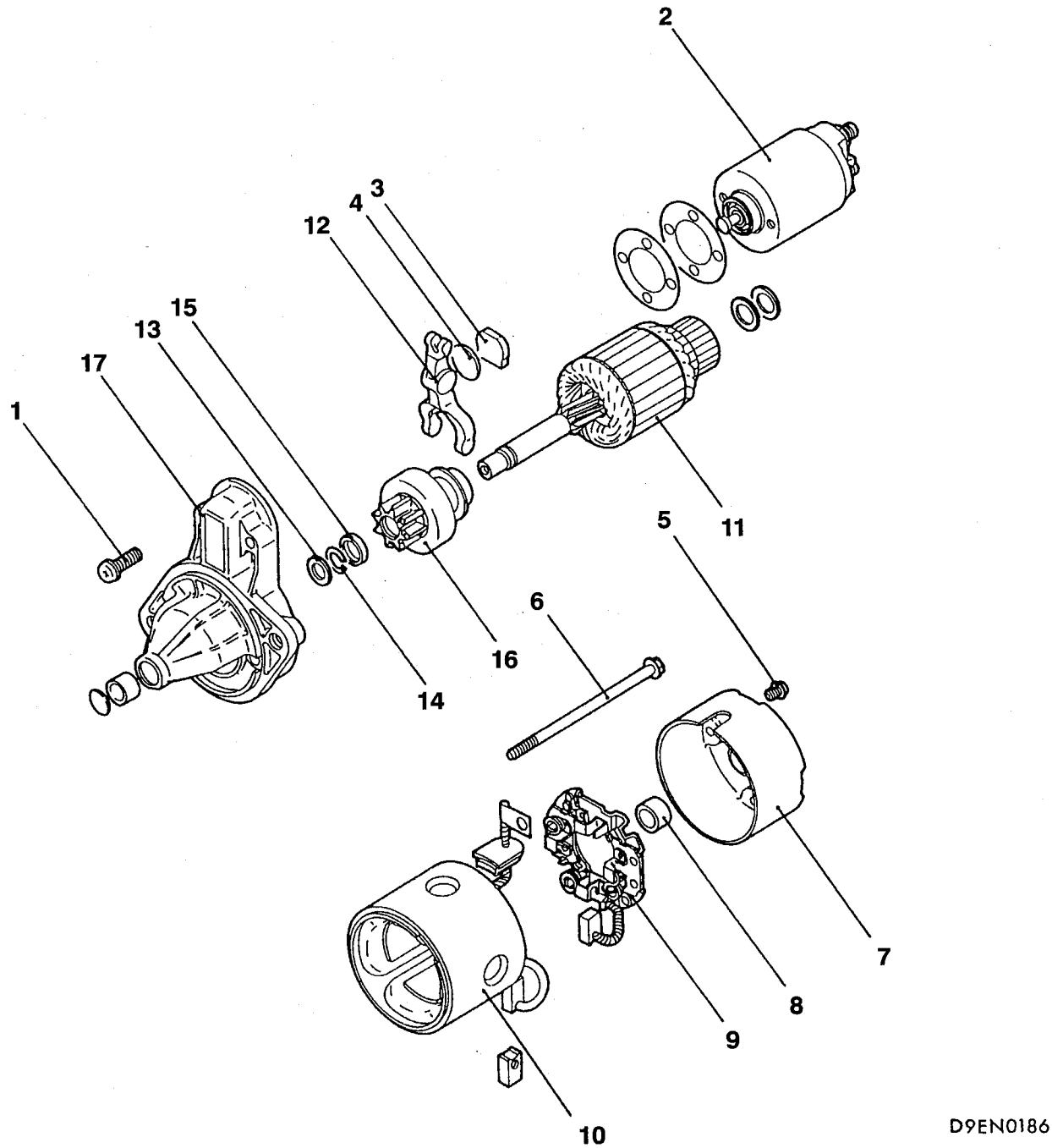

Disassembly steps

1. Screw
2. Magnetic switch
3. Packing
4. Plate
5. Screw
6. Through bolt
7. Rear bracket
8. Rear bearing
9. Brush holder assembly
10. Yoke assembly
11. Armature
12. Lever
13. Washer
14. Snap ring ◀C▶ ▶A◀
15. Stop ring ◀C▶ ▶A◀
16. Overrunning clutch
17. Front bracket

DISASSEMBLY AND REASSEMBLY <REDUCTION DRIVE TYPE>

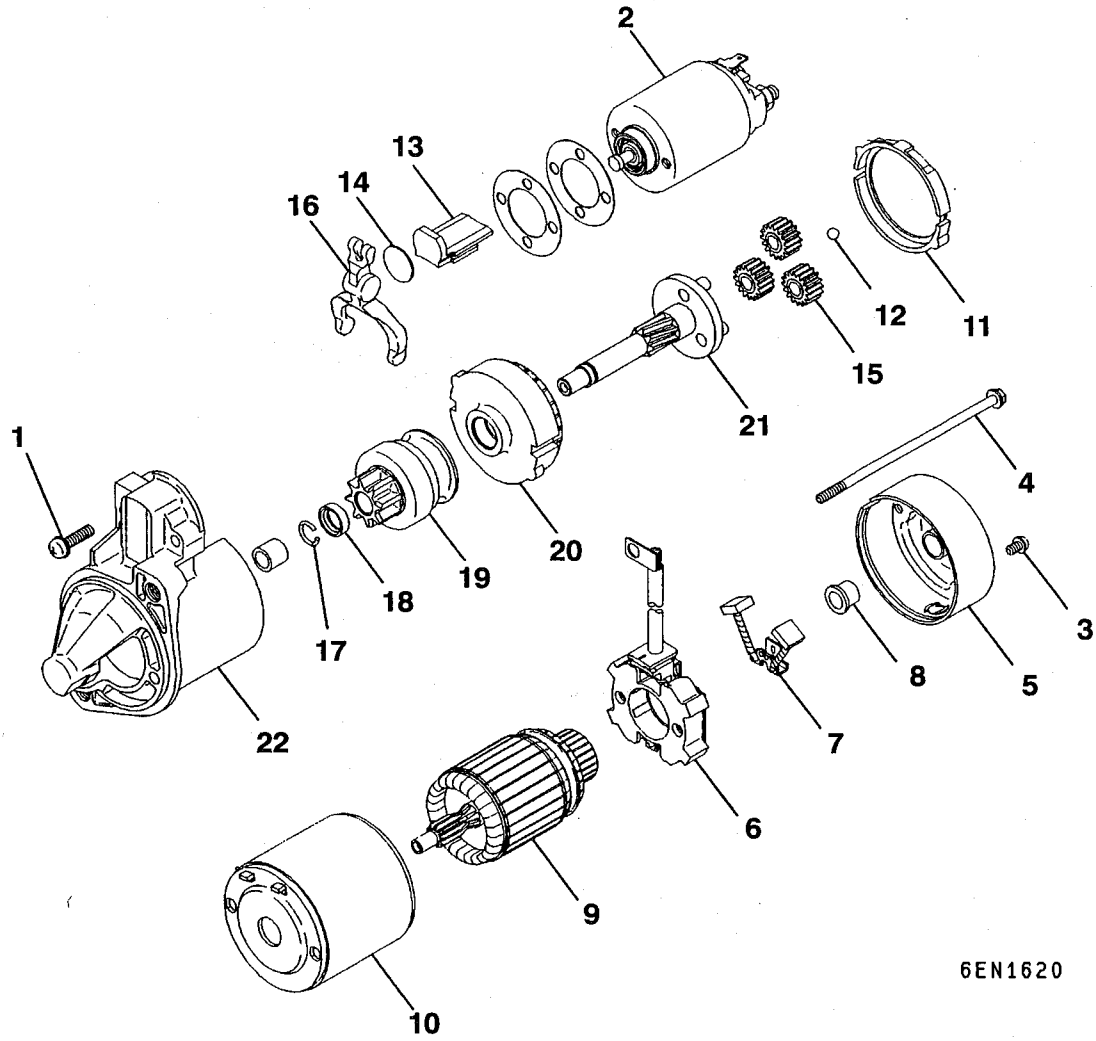

Disassembly steps

1. Screw
◀A▶ 2. Magnetic switch
3. Screw
4. Through bolt
5. Rear bracket
6. Brush holder
7. Brush
8. Rear bearing
◀B▶ 9. Armature
10. Yoke assembly
◀B▶ 11. Ball
12. Packing A
13. Packing B
14. Plate
15. Planetary gear
16. Lever
◀C▶ ▶A◀ 17. Snap ring
◀C▶ ▶A◀ 18. Stop ring
19. Overrunning clutch
20. Internal gear
21. Planetary gear holder
22. Front bracket

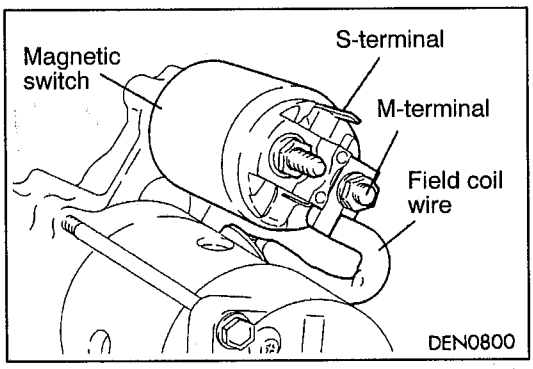

DISASSEMBLY SERVICE POINTS

◀A▶ MAGNETIC SWITCH REMOVAL

Disconnect the field coil wire from M-terminal of the magnetic switch.

◀B▶ ARMATURE AND BALL REMOVAL

When removing the armature, do not lose the ball placed at the end as a bearing.

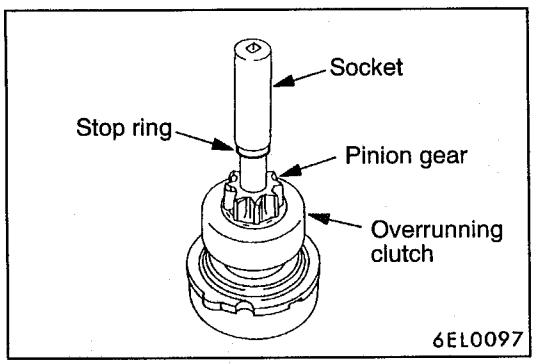

◀C▶ SNAP RING/STOP RING REMOVAL

1. Using an appropriate wrench socket, push the stop ring toward the overrunning clutch.

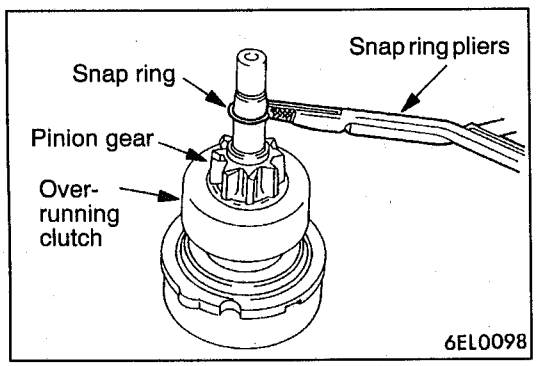

2. Remove the snap ring with snap ring pliers and then remove the stop ring and overrunning clutch.

STARTER MOTOR PARTS CLEANING

1. Do not immerse the parts in cleaning solvent. Immersing the yoke and field coil assembly and/or armature will damage insulation. Wipe these parts with a cloth only.
2. Do not immerse the drive unit in cleaning solvent. The overrunning clutch is pre-lubricated at the factory and solvent will wash lubrication from clutch.
3. The drive unit may be cleaned with a brush moistened with cleaning solvent and wiped dry with a cloth.

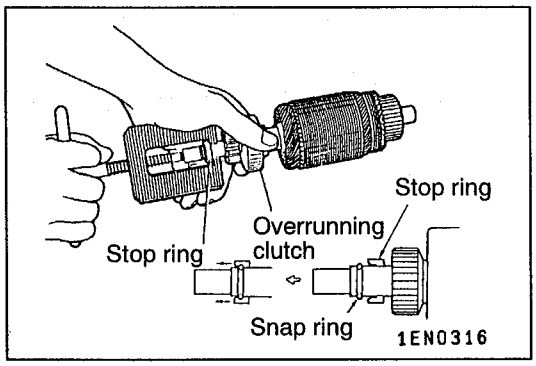

REASSEMBLY SERVICE POINTS

▶A◀ STOP RING/SNAP RING INSTALLATION

Using an appropriate tool, pull the stop ring over the snap ring.

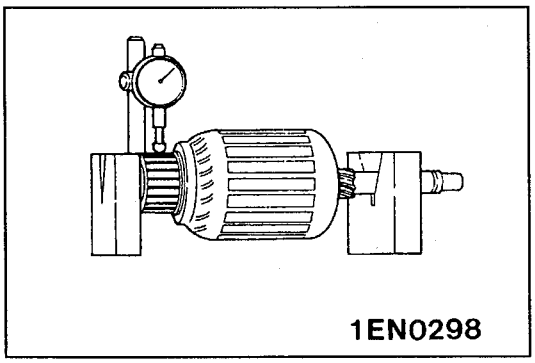

INSPECTION

COMMUTATOR

1. Place the armature in a pair of "V" blocks and check the runout with a dial indicator.
   Standard value: 0.05 mm
   Limit: 0.1 mm

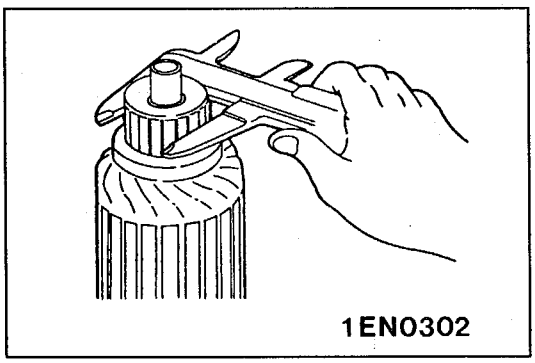

2. Measure the commutator outer diameter.
   Standard value:
   32.0 mm <Direct drive type>
   29.4 mm <Reduction drive type>
   Limit:
   31.4 mm <Direct drive type>
   28.8 mm <Reduction drive type>

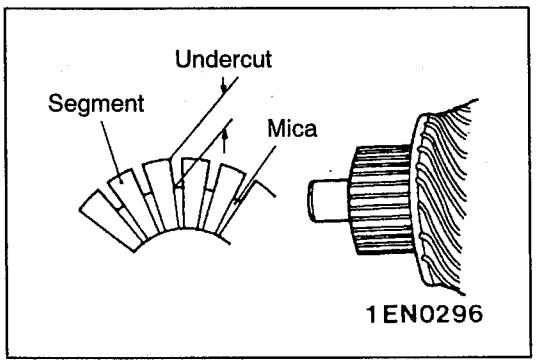

3. Check the undercut depth between segments.
   Standard value: 0.5 mm
   Limit: 0.2 mm

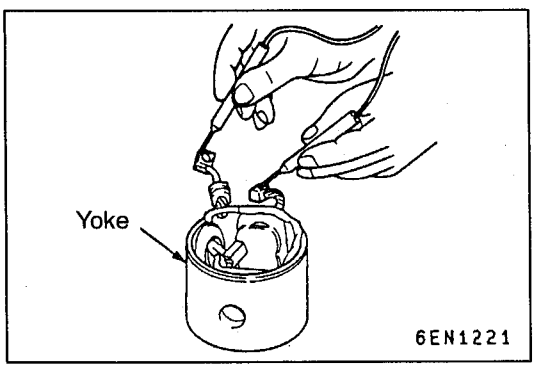

FIELD COIL OPEN-CIRCUIT TEST <Direct drive type>

Check the continuity between field brushes. If there is continuity, the field coil is in order.

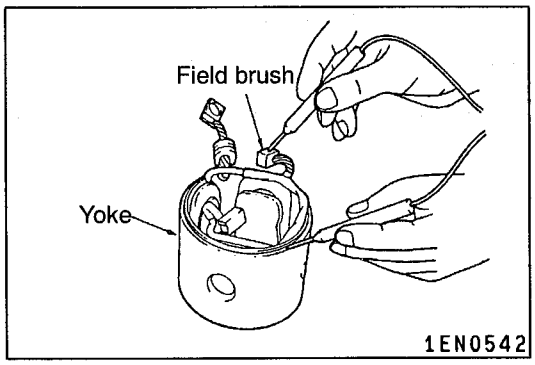

FIELD COIL GROUND TEST <Direct drive type>

Check the continuity between field coil brush and yoke. If there is no continuity, the field coil is free from earth.

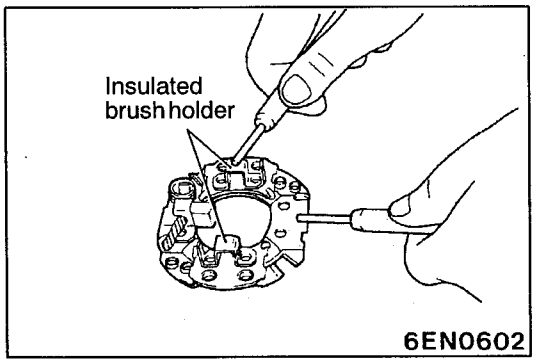

BRUSH HOLDER <Direct drive type>

Check the continuity between brush holder plate and brush holder.
If there is no continuity, the brush holder is in order.

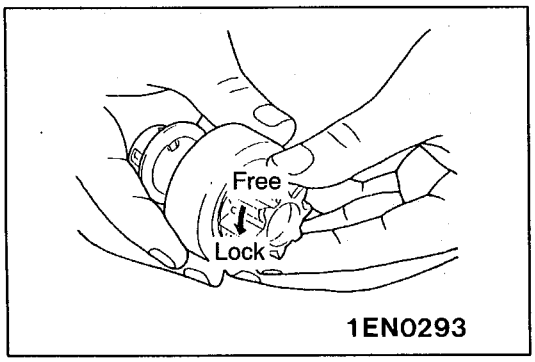

OVERRUNNING CLUTCH

1. Check that the pinion locks when it is turned anti-clockwise and moves smoothly when it is turned clockwise.
2. Check the pinion for wear or damage.

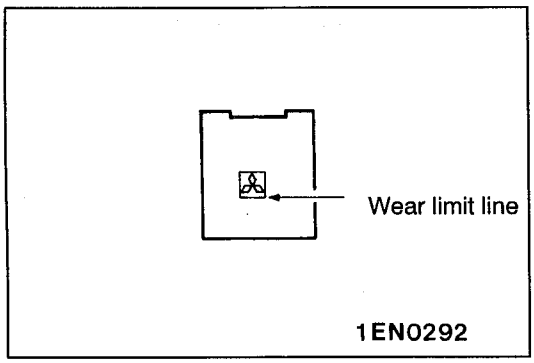

BRUSH

1. Check the brush for roughness of the surface that contacts the commutator and check the brush length.

   Limit: Wear limit line
2. In case the contacting surface has been corrected or the brush has been replaced, correct the contacting surface by winding sandpaper around the commutator.

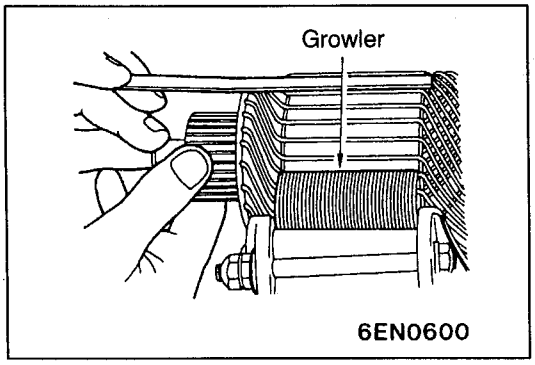

ARMATURE COIL SHORT-CIRCUIT TEST

1. Place armature in a growler.
2. Hold a thin steel blade parallel and just above while rotating armature slowly in growler. A shorted armature will cause blade to vibrate and be attracted to the core. Replace shorted armature.

   Caution
   Clean the armature surface thoroughly before checking.

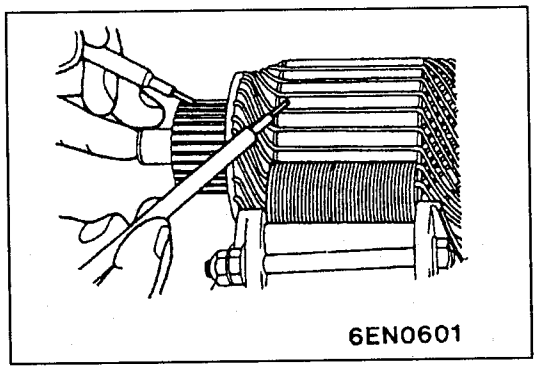
6EN0601

3. Check the insulation between each commutator segment and armature coil core.
   If there is no continuity, the insulation is in order.

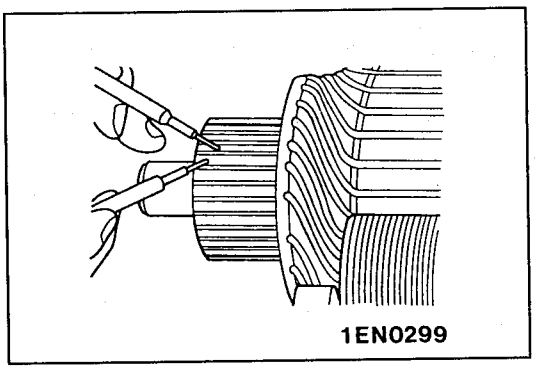
1EN0299

ARMATURE COIL OPEN-CIRCUIT INSPECTION

Check the continuity between segments. If there is continuity, the coil is in order.

IGNITION SYSTEM

GENERAL INFORMATION

<GDI>

This system is equipped with four ignition coils with built-in power transistors for each of the cylinders. Interruption of the primary current flowing in the primary side of an ignition coil generates a high voltage in the secondary side of the ignition coil. The high voltage thus generated is applied to the spark plugs to generate sparks.
The engine-ECU turns the power transistors inside the ignition coils alternately on and off. This causes the primary currents in the ignition coils to be alternately interrupted and allowed to flow to fire the cylinders in the order 1 – 3 – 4 – 2.

The engine-ECU determines which ignition coil should be controlled by means of the signals from the camshaft position sensor and the crank angle sensor. It also detects the crankshaft position, in order to provide ignition at the most appropriate timing in response to the engine operation conditions.
When the engine is cold or running at high altitudes, the ignition timing is slightly advanced to provide optimum performance. Furthermore, if knocking occurs, the ignition timing is gradually retarded until knocking ceases.

SYSTEM DIAGRAM

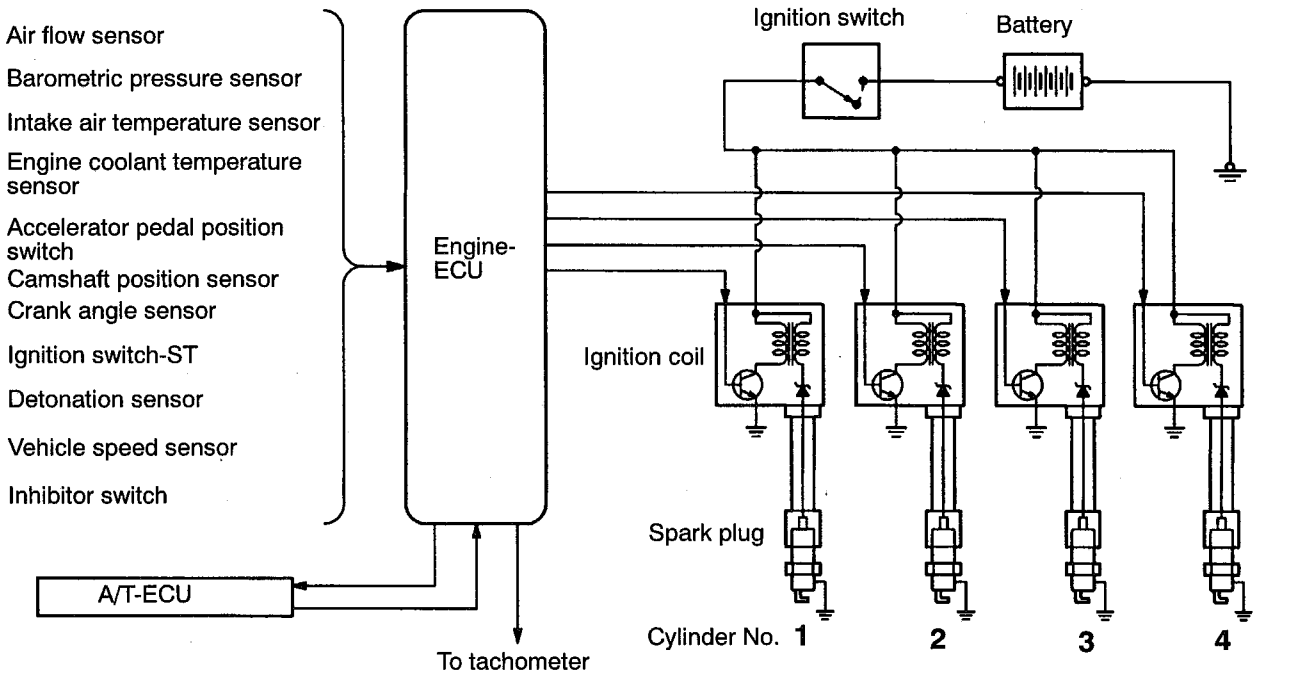

<MPI>

This system is equipped with two ignition coils (A and B) with built-in power transistors for the No. 1 and No. 4 cylinders and the No. 2 and No. 3 cylinders respectively.
Interruption of the primary current flowing in the primary side of ignition coil A generates a high voltage in the secondary side of ignition coil A.
The high voltage thus generated is applied to the spark plugs of No. 1 and No. 4 cylinders to generate sparks. At the time that the sparks are generated at both spark plugs, if one cylinder is at the compression stroke, the other cylinder is at the exhaust stroke, so that ignition of the compressed air/fuel mixture occurs only for the cylinder which is at the compression stroke.
In the same way, when the primary current flowing in ignition coil B is interrupted, the high voltage thus generated is applied to the spark plugs of No. 2 and No. 3 cylinders.
The engine-ECU turns the two power transistors inside the ignition coils alternately on and off. This causes the primary currents in the ignition coils to be alternately interrupted and allowed to flow to fire the cylinders in the order 1–3–4–2.
The engine-ECU determines which ignition coil should be controlled by means of the signals from the camshaft position sensor which is incorporated in the camshaft and from the crank angle sensor which is incorporated in the crankshaft. It also detects the crankshaft position in order to provide ignition at the most appropriate timing in response to the engine operation conditions. It also detects the crankshaft position in order to provide ignition at the most appropriate timing in response to the engine operation conditions.
When the engine is cold or operated at high altitudes, the ignition timing is slightly advanced to provide optimum performance.
When the automatic transmission shifts gears, the ignition timing is also retarded in order to reduce output torque, thereby alleviating shifting shocks.

SYSTEM DIAGRAM

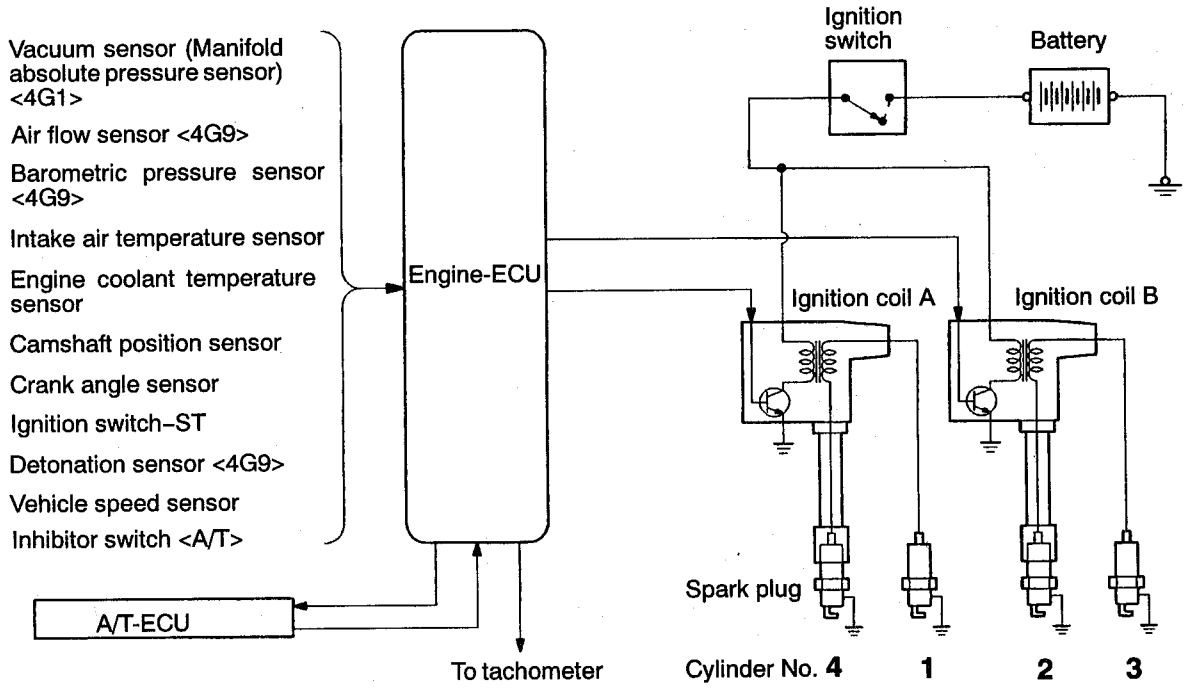

IGNITION COIL SPECIFICATIONS

Items	GDI	MPI
Type	Molded 4-coil	Molded 2-coil

SPARK PLUG SPECIFICATIONS

Items	GDI	MPI <Vehicles without catalytic converter>	MPI <Vehicles with catalytic converter>
NGK	BKR6EKUC	BKR5E	BKR5E-11
DENSO	–	K16PR-U	K16PR-U11
CHAMPION	–	RC10YC	RC10YC4

SERVICE SPECIFICATIONS

IGNITION COIL

Items	4G1-MPI	4G9-MPI
Secondary coil resistance kΩ	8.5 – 11.5	15 – 21

SPARK PLUG

Items		Standard value
Spark plug gap mm	GDI	0.5 – 0.7
	MPI <Vehicles without catalytic converter>	0.7 – 0.8
	MPI <Vehicles with catalytic converter>	1.0 – 1.1

RESISTIVE CORD

Items		Limit
Resistance kΩ	MPI	Max. 22

SPECIAL TOOL

Tool	Number	Name	Use
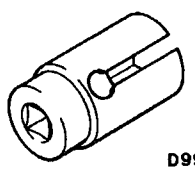 D998773	MD998773	Detonation sensor wrench	Detonation sensor removal and installation

ON-VEHICLE SERVICE

IGNITION COIL (WITH BUILT-IN POWER TRANSISTOR) CHECK <GDI>

Check by the following procedure, and replace if there is a malfunction.

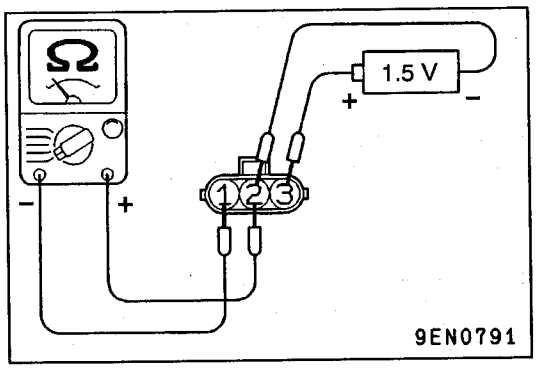

PRIMARY COIL AND POWER TRANSISTOR CONTINUITY CHECK

NOTE
1. An analogue-type circuit tester should be used.
2. Connect the negative (–) prove of the circuit tester to terminal 1.

Caution
This test must be performed quickly (in less than 10 seconds) to prevent coil from burning and power transistor from breakage.

Voltage: 1.5V	Terminal No.		
	1	2	3
When current is flowing	○	⊖	⊕
When current is not flowing			

SECONDARY COIL CHECK

NOTE
It is impossible to check the secondary coil through the continuity check as a diode is integrated in the secondary coil circuit of this ignition coil. So, check the secondary coil in the following procedure.

1. Disconnect the ignition coil connector.
2. Remove the ignition coil and install a new spark plug to the ignition coil.
3. Connect the ignition coil connector.
4. Earth the side electrode of the spark plug and crank the engine.
5. Check that spark is produced between the electrodes of the spark plug.
6. If no spark is produced, replace the ignition coil with a new one and recheck.
7. If spark is produced with the new ignition coil, replace the old one as it is faulty. If no spark is produced again, the ignition circuit is suspected as faulty. Check the ignition circuit.

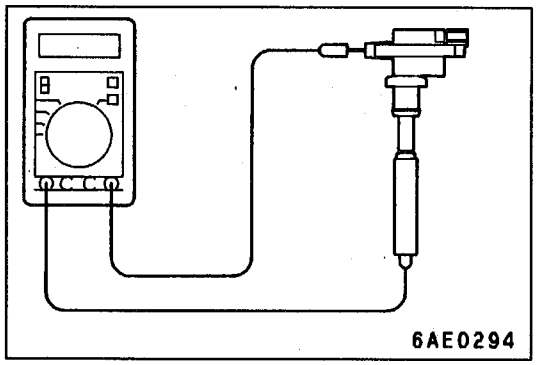

IGNITION COIL (WITH BUILT-IN POWER TRANSISTOR) CHECK <MPI>

Check by the following procedure, and replace if there is a malfunction.

SECONDARY COIL RESISTANCE CHECK

Measure the resistance between the high-voltage terminals of the ignition coil.

Standard value:
8.5 – 11.5 kΩ <4G1>
15 – 21 kΩ <4G9>

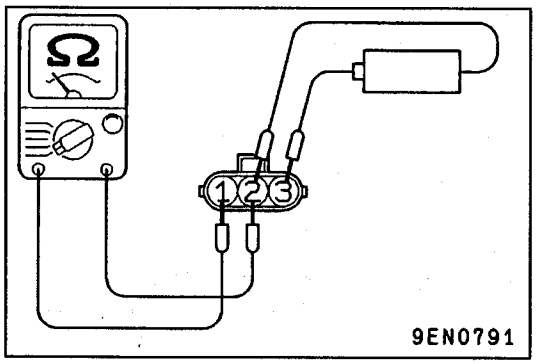

PRIMARY COIL AND POWER TRANSISTOR CONTINUITY CHECK

NOTE
1. An analogue-type circuit tester should be used.
2. Connect the negative (–) prove of the circuit tester to terminal 1.

Caution
This test must be performed quickly (in less than 10 seconds) to prevent coil from burning and power transistor from breakage.

Voltage: 1.5V	Terminal No.		
	1	2	3
When current is flowing	○	⊖	⊕
When current is not flowing			

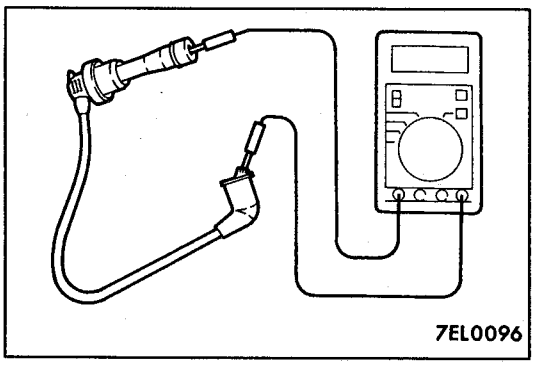

RESISTIVE CORD CHECK <MPI>

Measure the resistance of the all spark plug cables.
1. Check cap and coating for cracks.
2. Measure resistance.

Limit: Max. 22 kΩ

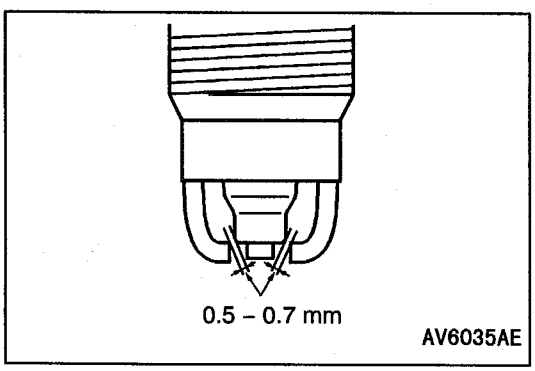

SPARK PLUG CHECK <GDI>

1. Check the electrode for burned cuts, the ceramic insulator for damage and if the spark plug is well burned.
2. If the spark plug must be cleaned due to deposits, use a spark plug cleaner or a wire brush.
3. Use a spark plug gap gauge to check the spark plug gap, and adjust if necessary.

Standard value: 0.5 – 0.7 mm

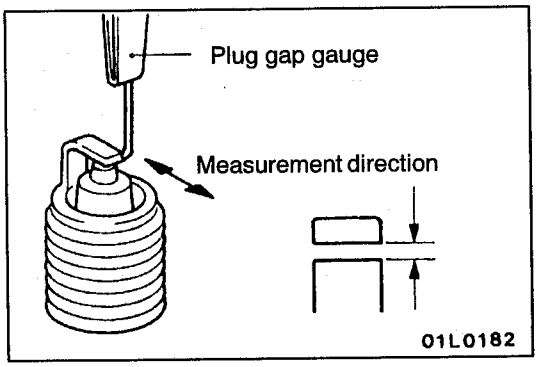

SPARK PLUG CHECK AND CLEANING <MPI>

1. Remove the spark plug cables.

   Caution
   When pulling off the spark plug cable from the plug always hold the cable cap, not the cable.

2. Remove the spark plugs.
3. Check for burned out electrode or damaged insulator. Check for even burning.
4. Remove carbon deposits with wire brush or plug cleaner. Remove sand from plug screw with compressed air.
5. Use a plug gap gauge to check that the plug gap is within the standard value range.

   Standard value:

   <Vehicles without catalytic converter>
   0.7 – 0.8 mm

   <Vehicles with catalytic converter>
   1.0 – 1.1 mm

   If the plug gap is not within the standard value range, adjust by bending the earth electrode.

6. Clean the engine plug holes.

   Caution
   Be careful not to allow foreign matter in cylinders.

7. Install the spark plugs.

CAMSHAFT POSITION SENSOR CHECK

Refer to GROUP 13A – Troubleshooting. <GDI>
Refer to GROUP 13B – Troubleshooting. <4G1-MPI>
Refer to GROUP 13C – Troubleshooting. <4G9-MPI>

CRANK ANGLE SENSOR CHECK

Refer to GROUP 13A – Troubleshooting. <GDI>
Refer to GROUP 13B – Troubleshooting. <4G1-MPI>
Refer to GROUP 13C – Troubleshooting. <4G9-MPI>

DETONATION SENSOR CHECK <4G9>

Check the detonation sensor circuit if self-diagnosis code, No. 31 is shown.

NOTE
For information concerning the self-diagnosis codes, refer to GROUP 13A – Troubleshooting <GDI>, or GROUP 13C – Troubleshooting <4G9-MPI>.

WAVEFORM CHECK USING AN ANALYZER <MPI>

Ignition Secondary Voltage Waveform Check

MEASUREMENT METHOD

1. Clamp the secondary pickup around the spark plug cable.

   NOTE
   (1) The peak ignition voltage will be reversed when the spark cables No. 2 and No. 4, or No. 1 and No. 3 cylinders are clamped.
   (2) Because of the two-cylinder simultaneous ignition system, the waveforms for two cylinders in each group appear during waveform observation (No. 1 cylinder – No. 4 cylinder, No. 2 cylinder – No. 3 cylinder). However, waveform observation is only applicable for the cylinder with the spark plug cable clamped by the secondary pickup.
   (3) Identifying which cylinder waveform is displayed can be difficult. For reference, remember that the waveform of the cylinder attached to the secondary pickup will be displayed as stable.

2. Clamp the spark plug cable with the trigger pickup.

   NOTE
   Clamp the trigger pickup to the same spark plug cable clamped by the secondary pickup.

STANDARD WAVEFORM

Observation Conditions

Function	Secondary
Pattern height	High (or Low)
Pattern selector	Raster
Engine revolutions	Curb idle speed

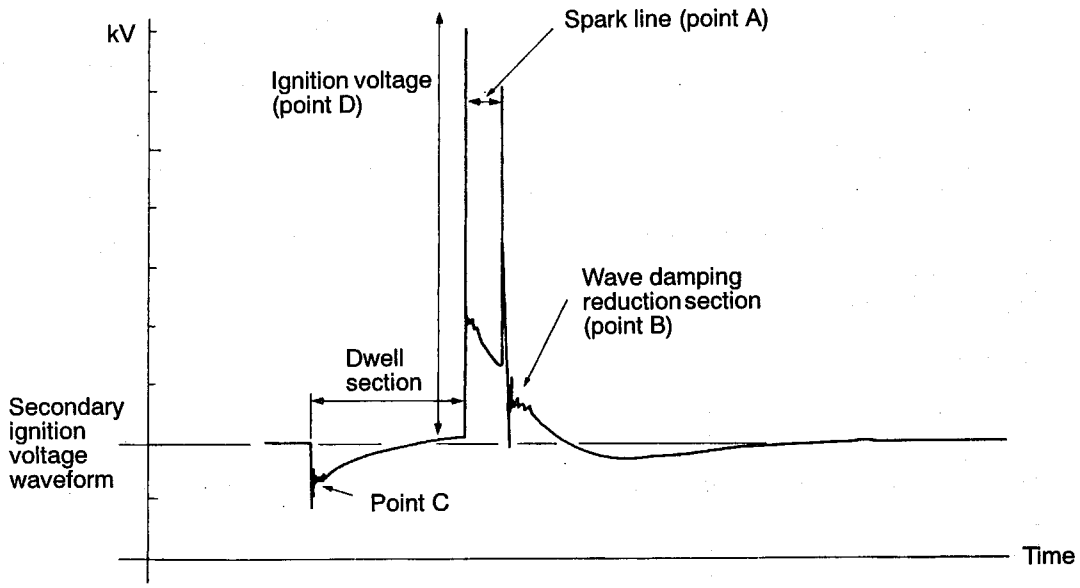

7EL0147

Observation Condition (The only change from above condition is the pattern selector.)

Pattern selector	Display

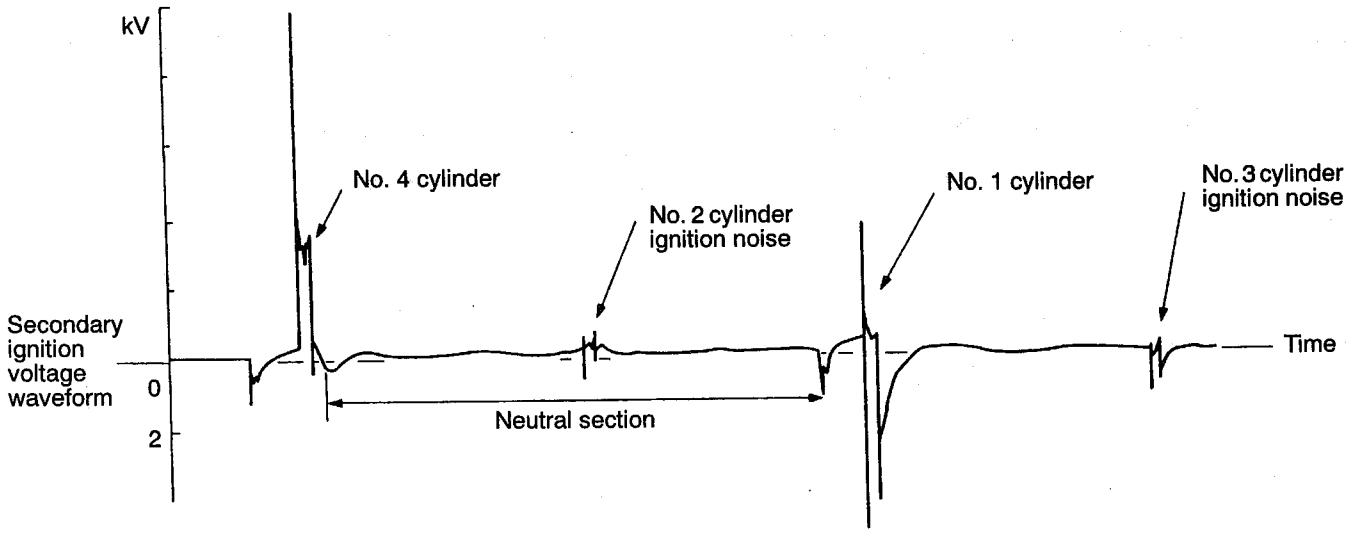

6EL0183

WAVEFORM OBSERVATION POINTS

Point A: The height, length and slope of the spark line show the following trends (Refer to abnormal waveform examples, 1, 2, 3 and 4).

Spark line		Plug gap	Condition of electrode	Compression force	Concentration of air mixture	Ignition timing	Spark plug cable
Length	Long	Small	Normal	Low	Rich	Advanced	Leak
	Short	Large	Large wear	High	Lean	Retarded	High resistance
Height	High	Large	Large wear	High	Lean	Retarded	High resistance
	Low	Small	Normal	Low	Rich	Advanced	Leak
Slope		Large	Plug is fouled	–	–	–	–

Point B: Number of vibration in reduction vibration section (Refer to abnormal waveform example 5)

Number of vibrations	Coil and condenser
Three or more	Normal
Except above	Abnormal

Point C: Number of vibrations at beginning of dwell section (Refer to abnormal waveform example 5)

Number of vibrations	Coil
5–6 or higher	Normal
Except above	Abnormal

Point D: Ignition voltage height (distribution per each cylinder) shows the following trends.

Ignition voltage	Plug gap	Condition of electrode	Compression force	Concentration of air mixture	Ignition timing	Spark plug cable
High	Large	Large wear	High	Lean	Retarded	High resistance
Low	Small	Normal	Low	Rich	Advanced	Leak

EXAMPLES OF ABNORMAL WAVEFORMS

Abnormal waveform	Wave characteristics	Cause of problem
Example 1  01P0215	Spark line is high and short.	Spark plug gap is too large.
Example 2 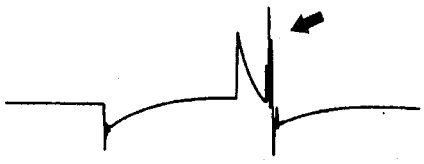 01P0216	Spark line is low and long, and is sloping. Also, the second half of the spark line is distorted. This could be a result of misfiring.	Spark plug gap is too small.
Example 3  01P0217	Spark line is low and long, and is sloping. However, there is almost no spark line distortion.	Spark plug gap is fouled.
Example 4  01P0218	Spark line is high and short. Difficult to distinguish between this and abnormal waveform example 1.	Spark plug cable is nearly falling off. (Causing a dual ignition)
Example 5 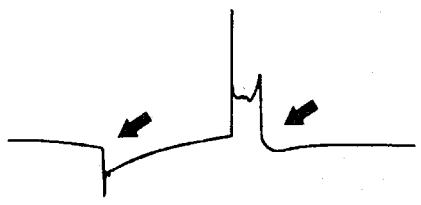 01P0219	No waves in wave damping section.	Layer short in ignition coil

IGNITION COIL

REMOVAL AND INSTALLATION

Pre-removal and Post-installation Operation
- Engine Cover Removal and Installation <GDI>
- Resonance Tank Removal and Installation <GDI> (Refer to GROUP 15.)
- Air Cleaner Assembly and Air Intake Hose Removal and Installation

<GDI>

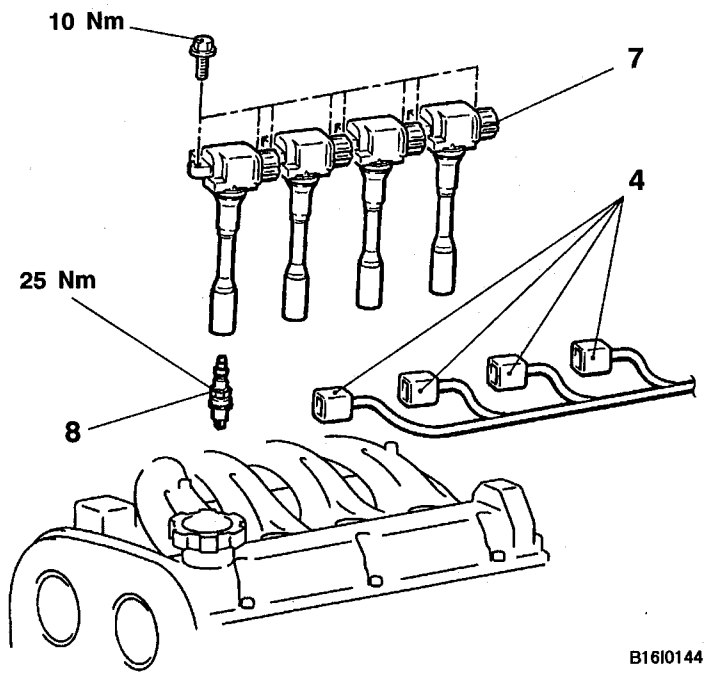

<MPI>

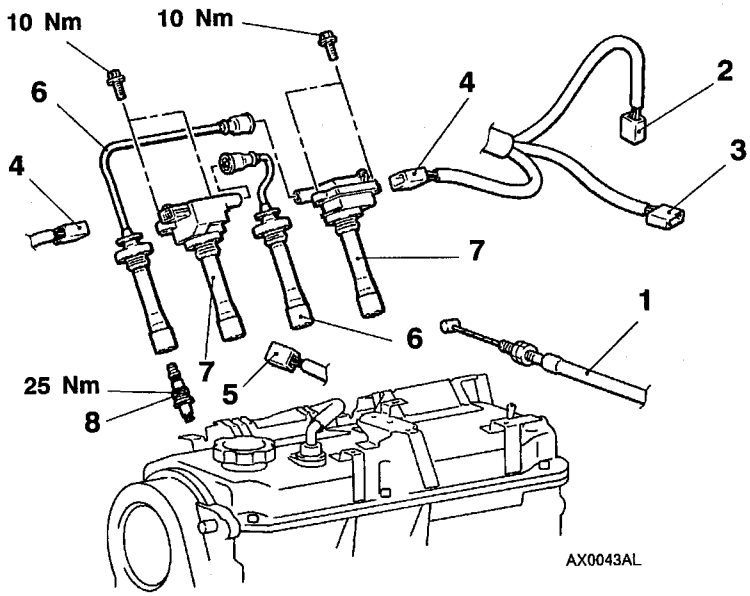

Disassembly steps

1. Accelerator cable <MPI>
2. Camshaft position sensor connector <MPI>
3. Oxygen sensor connector <4G1-MPI>
4. Ignition coil connector
5. Idle speed control connector <4G9-MPI>
6. Spark plug cable <MPI>
7. Ignition coil
8. Spark plug

CRANK ANGLE SENSOR

REMOVAL AND INSTALLATION

Pre-removal and Post-installation Operation
Timing Belt Front Lower Cover Removal and Installation (Refer to GROUP 11.)

<4G9>

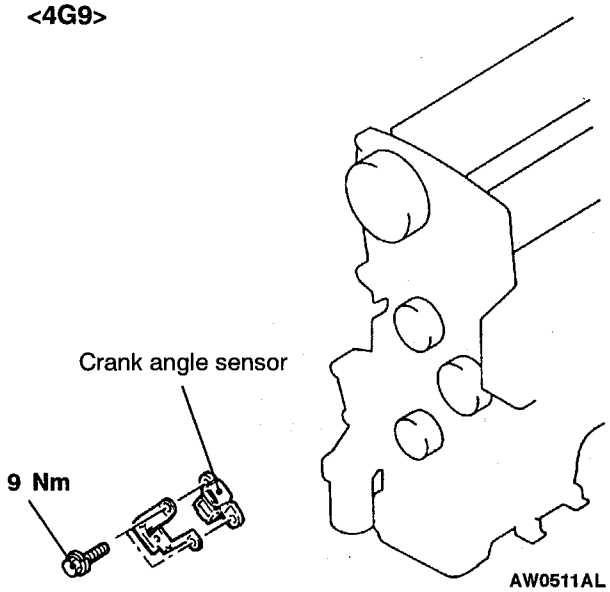

<4G1>

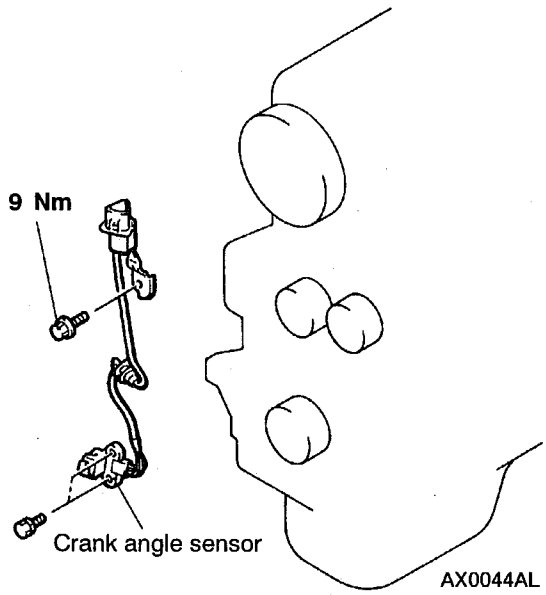

CAMSHAFT POSITION SENSOR

REMOVAL AND INSTALLATION

Pre-removal and Post-installation Operation
Engine Cover Removal and Installation <GDI>

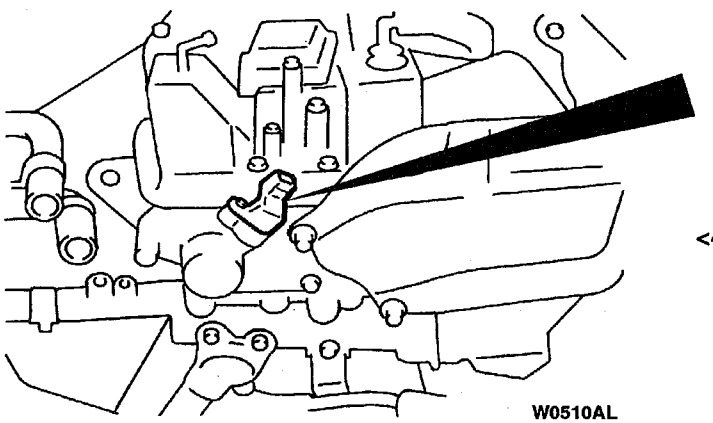

<4G9>

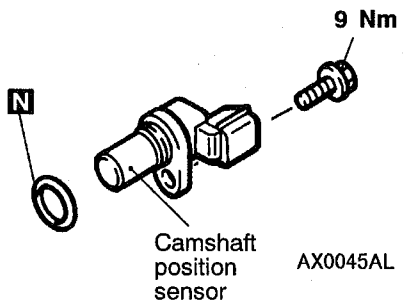

<4G1>

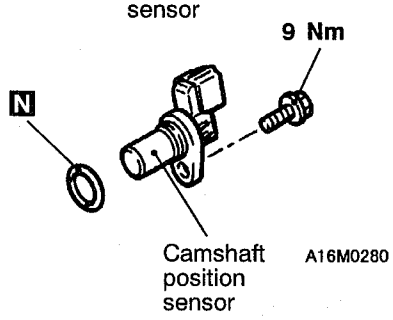

DETONATION SENSOR <4G9>

REMOVAL AND INSTALLATION

Pre-removal and Post-installation Operation
- Engine Cover Removal and Installation <GDI>
- Under Cover Removal and Installation <MPI>

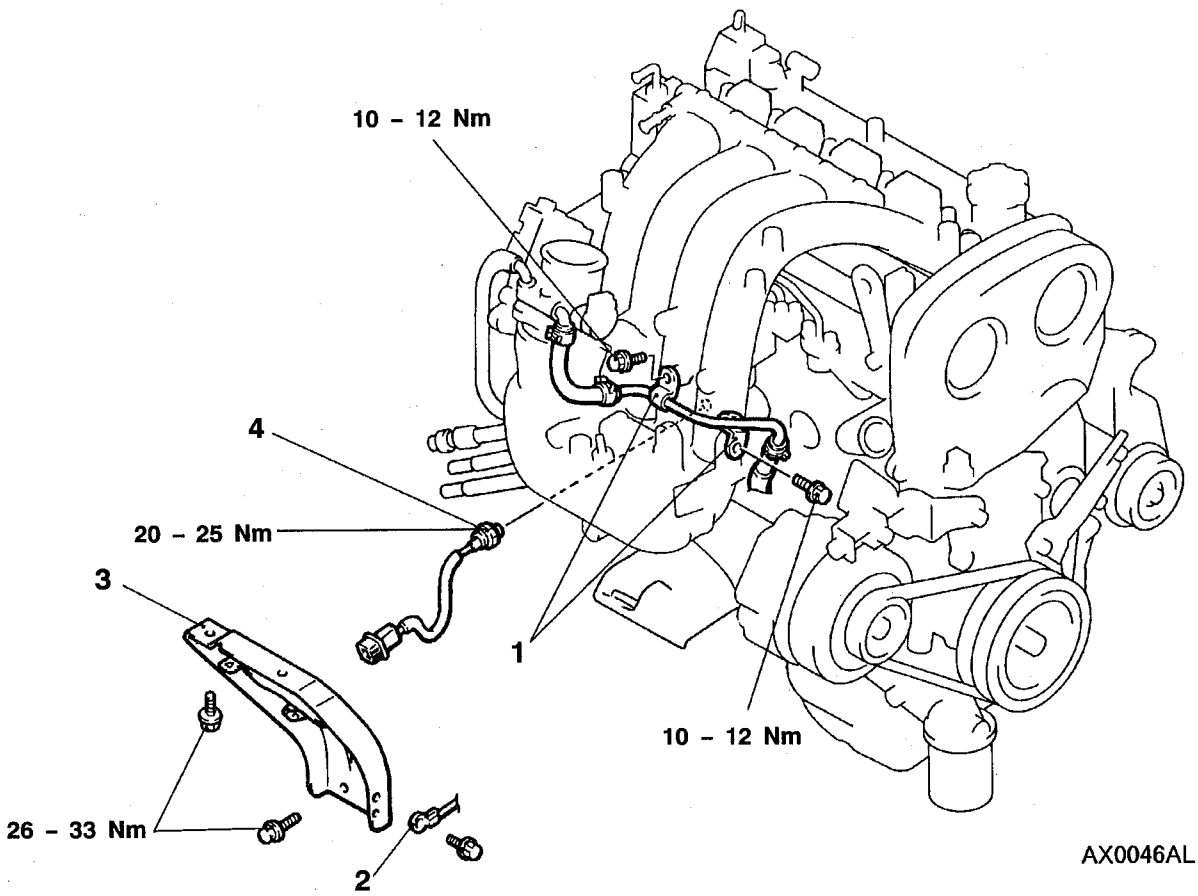

Disassembly steps

1. Water pipe clamp <GDI>
2. Earth line <MPI>
3. Intake manifold stay <MPI>

◀A▶ ▶A◀ 4. Detonation sensor

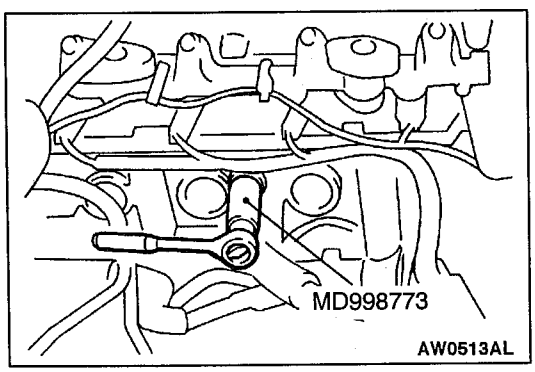

REMOVAL SERVICE POINT

◀A▶ DETONATION SENSOR REMOVAL

INSTALLATION SERVICE POINT

▶A◀ DETONATION SENSOR INSTALLATION